HINGES

SUGATSUNE

Updated 2019.01.23

BUTT HINGES

Picture	Item Name		Door Weight (kg)/pair	Page
	TTS-100	BRASS	-	396
	TTS-800	BRASS	-	396
	27900, 27800	STAINLESS 316 STEEL	4	398
	28100	STAINLESS 316 STEEL	4	398
	28500, 28000	STAINLESS 316 STEEL	4	398
	28300, 28400	STAINLESS 316 STEEL	4	399
	HG-BF1	STAINLESS 304 STEEL	-	399
	KHA	STAINLESS 304 STEEL	3 - 15	400
	LSB	STAINLESS 304 STEEL	6 - 30	400
	3535	BRASS	20	483
	3535SS, 4040SS	STAINLESS 304 STEEL	25 - 40	482
	3535WSS, 4040WSS	STAINLESS 304 STEEL	25 - 30	482
	4545BSS	STAINLESS 304 STEEL	45	482
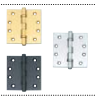	4040B	BRASS	50	483
	LSF	STAINLESS 316 STEEL	35 - 85	399

SPRING HINGES

Picture	Item Name		Load Capacity (kgf)	Page
	HG-SH	STAINLESS 304 STEEL	Door Weight (kg) 1 - 6/pair	402
	HG-SHL	STAINLESS 304 STEEL	-	402
	HG-BF3-2	STAINLESS 304 STEEL	-	403
	HG-VH8		-	423
	DA	STAINLESS 304 STEEL	-	485
	DAW		-	486
	PM120		20/2 pcs, 30/3 pcs	486
	SA	STAINLESS 304 STEEL	20 - 40/2 pcs 30 - 60/3 pcs	484
	ST150-6314-05	STAINLESS 304 STEEL	40/2 pcs, 60/3 pcs	484

LIFT-OFF HINGES

Picture	Item Name		Door Weight (kg)/pair	Page
	HG-LSH NEW		-	367-24
	HG-LSW NEW		-	367-24
	TTS-200	BRASS	-	397
	NH-40	STAINLESS 304 STEEL	7	401
	KN	STAINLESS 304 STEEL	7 - 15	401
	ZL-1701	STAINLESS 316 STEEL	40 - 50	480
	S-6173-2, S-6166-2	STAINLESS 304 STEEL	40	481
	S-6173-5, S-6166-6	STAINLESS 304 STEEL	50	481

ANGLE HINGES

Picture	Item Name		Door Weight (kg)/pair	Page
	AHS	BRASS	2.6	408
	AHW	BRASS	2.6	408
	AHA-24	BRASS	2.6	409
	AHB-18	BRASS	2.6	409

PIVOT HINGES

Picture	Item Name		Door Weight (kg)/pair	Page
	PH084N		2	460
	PV-30		2.6	460
	WP1, WP3	STAINLESS 430 STEEL	1.8	404
	PP-60	STAINLESS 430 STEEL	2.6	404
	PL-60	STAINLESS 430 STEEL	2.6	405
	PL-65	STAINLESS 430 STEEL	4	405
	PL-100	STAINLESS 304 STEEL	6	405
	PAS	BRASS	2.6 - 4	406
	PAW	BRASS	2.6 - 4	406
	PH	BRASS	2.6 - 4	407
	TTS-902	BRASS	-	407
	PH-01		35	479

TABLE TOP HINGES / PIANO HINGES

Picture	Item Name		Door Weight (kg)/pair	Page
	MH-30	BRASS	4	413
	MH-40	BRASS	4	413
	MH-83	STAINLESS 304 STEEL	4	413
	MA-5	STAINLESS 304 STEEL	4	413
	LS, LSD, LB30, LB45	STAINLESS 430 STEEL / STAINLESS 304 STEEL	-	414
	LHN	STAINLESS 304 STEEL	-	415
	HG-MH		-	415

CONCEALED HINGES

Picture	Item Name		Door Weight (kg)/pair	Page
	HES3D-G90BKT NEW		-	367-7
	HES3D-70 NEW		9/2 pcs, 12/3 pcs	367-8
	HES3D-E160 NEW		-	367-9
	J95		25/2 pcs, 40/3 pcs	369 ' 371
	J95-P6T		-	368
	GH-J95FP-CR	FOR GLASS DOORS	-	372 ' 373
	J95SC		-	373
	J95ZC		-	373
	100	STAINLESS 304 STEEL	-	374 ' 376
	100 MOUNTING PLATE	STAINLESS 304 STEEL	-	377
	120		-	378 ' 381
	170		-	382 ' 384
	H160		-	385 ' 388
	MOUNTING PLATE		-	389 ' 392
	HG-YS65C	STAINLESS 304 STEEL	10	417
Discontinued	2000RV-2		-	418
	2000-150		-	418
	2000-MIGNON		-	418
	T-90-200		-	419
	SDH-001		-	410

Picture	Item Name		Door Weight (kg)/pair	Page
	SDH-P		-	411
	SDH-G	FOR GLASS DOORS	-	412
	RK-50	STAINLESS 304 STEEL	2.6	416
	R		-	416
	HES3D-90		-	470
	HES3D-120		30/2 pcs, 40/3 pcs	471
	HES3D-V135LGR		40/2 pcs, 55/3 pcs	367-10
	HES3D-160		45/2 pcs, 60/3 pcs	472
	HES3D-E190		100/2 pcs, 125/3 pcs	473
	120BKT		-	475
	E190BKT		-	475
	HES-3030PR		25/3 pcs	477
	HES-3038BK	BRASS	45/3 pcs	476
	HES-3030BR	BRASS	50/3 pcs	476
	I-66		30/2 pcs, 50/3 pcs	478

DAMPERS

Picture	Item Name	Door Weight (kg)	Page
	DI-4000, DL-4000, DC-4000	3 - 5/pc	394
	DSW	-	395
	DS	-	395
	DC	4 - 7 kg	457

DAMPER HINGES (Soft close)

Picture	Item Name	Torque Moment (kgf)/pair	Page
	HG-JHM11 NEW	0.51 - 4.08	367-11
	HG-JHM20T NEW	61.2 - 81.6	367-13
	HG-VH8	0.22 - 0.39/pc	423
	HG-JHS9 (SELF-OPENING)	0.28 - 0.44	421
	HG-JHM9	0.55 - 0.88	422
	HG-JHW16S	20.4 - 51/pc	428
	HG-JH14-50 STAINLESS 304 STEEL	30.6 - 51	428
	HG-JH	30.6 - 71.4	429
	HG-JHW, HG-JHWG	61.2 - 142.8	429
	HG-JHM14 (Mortise Mount)	5.09 - 20.39	424 - 425
	HG-JHM16 (Mortise Mount)	20.4 - 51	426
	HG-JHM20 (Mortise Mount)	61.2 - 81.6	427
	URD8-3	0.22 - 0.39/pc	423

SPECIAL HINGES

Picture	Item Name	Door Weight (kg)/pair	Page
	HG-BH STAINLESS 304 STEEL	2.6	403
	STH-C64 STAINLESS 304 STEEL	2.8	417

TORQUE HINGES (Free stop)

Picture	Item Name	Torque Moment (kgf)/piece	Page
	HG-TAS NEW	15.3 - 40.8	367-14
	HG-TASJ40 NEW	0 - 40.8	367-15
	HG-TBS NEW	15.3 - 40.8	367-16
	HG-TBSJ40 NEW	0 - 40.8	367-17
	HG-KNT NEW	3.1 - 16.3	367-18
	HG-TWP NEW	15.3 - 30.6	367-19
	HG-ITHP NEW	7.1 - 30.6	367-19
	HG-TQW8080 NEW	81.6	367-20
	HG-TMH NEW	30.6	367-21
	HG-TUWA NEW	7.1 - 15.3	367-22
	HG-MF	0.8 - 2.5	431
	HG-VH8	1.53 - 3.57	423
	HG-TS STAINLESS 304 STEEL	3.6 - 15.3	432
	HG-TU STAINLESS 304 STEEL	3.6 - 7.1	432
	SK-T-ZA	15 - 30	431
	HG-TA STAINLESS 430 STEEL	20.4 - 45.9	434

Picture	Item Name		Torque Moment (kgf)/piece	Page
	HG-TB	STAINLESS 430 STEEL	7.1 - 45.9	434
	HG-IT	STAINLESS 304 STEEL	25.49 - 71.38	433
	HG-DTA (WITH DETENT)	STAINLESS 304 STEEL	4.08 - 8.16	435
	HG-DTB (WITH DETENT)	STAINLESS 304 STEEL	4.08 - 8.16	435
	HG-TA45H (WITH BY-PASS HOLE)	STAINLESS 430 STEEL	45.9	436
	HG-TC45H (WITH BY-PASS HOLE)	STAINLESS 430 STEEL	45.9	437
	HG-T30S15 (DUAL AXIS)	STAINLESS 430 STEEL	30.6 (Tilt), 15.3 (Swivel)	438
	HG-T70S30 (DUAL AXIS)	STAINLESS 430 STEEL	71.4 (Tilt), 30.6 (Swivel)	438
	HG-S (SWIVEL TORQUE)	STAINLESS 430 STEEL	7.1 - 102	439 - 441
	HG-ITJ4080 (TORQUE ADJUSTABLE)	STAINLESS 430 STEEL	41 - 82	443
	HG-TQA (ONE-WAY)		91.8/pair	445
	HG-TQJ100 (TORQUE ADJUSTABLE)		0 - 102	444
	HG-RNM30 (DETACHABLE)		30.6/pair	442

DETENT HINGES

Picture	Item Name	Door Weight (kg)/pair	Page
	HG-RCT12-C NEW	-	367-23
	HG-MPS2	1	446
	HG-YJ50	1.2	446
	HG-CSH63	-	447
	HG-YC105 STAINLESS 304 STEEL	-	447

GLASS DOOR HINGES

FOR GLASS DOORS

Picture	Item Name		Door Weight (kg)/pair	Page
	GS-GH5 NEW		49	367-3
	GS-GB5		-	367-3
	GS-GH20 NEW		20	367-4
	GS-GB20 NEW		-	367-4
	GS-GH50 NEW		-	367-5
	XL-GH02AF-120 NEW		-	367-5
	GH-G02 NEW		-	367-6
	GH-G07 NEW		-	367-6
	HES3D-G90BKT NEW		-	367-7
	HES3D-70 NEW		9/2 pcs, 12/3 pcs	367-8
	HES3D-E160 NEW		-	367-9
	HES3D-V135LGR		40/2 pcs, 55/3 pcs	367-10
	GH36-NCR		4	453
	GHC34-8		4	453
	GH34-0SS	STAINLESS 304 STEEL	4	454
	GH34-8SS	STAINLESS 304 STEEL	4	454
	GH34-0		4	455
	GH34-8		4	455
	GH34-0CR-K		4	456
	GH34-8CR-K		4	456

Picture	Item Name		Door Weight (kg)/pair	Page
	GHC34-8CR-K		4	457
	GP-40	BRASS	4	459
	GPH		4	461
	XL-GH01-250	STAINLESS 304 STEEL	4.8	458
	XL-GH01-600	STAINLESS 304 STEEL	11	458
	XL-GH03-48-0	STAINLESS 304 STEEL	12	452
	XL-GH03-48-8	STAINLESS 304 STEEL	12	452
	XL-GC04-CR		12	449
	XL-GC07-CR		12	449
	XL-GC05-CR		-	449
	GH-450	BRASS	15	450
	GH-450G	BRASS	15	450
	GH-456C	BRASS	15	451
	GH-456N	BRASS	15	451
	GH-PSL40	BRASS	20	459
	XL-GH02-120	STAINLESS 304 STEEL	45	464
	XL-GH02F-120	STAINLESS 304 STEEL	45	464
	XL-GH05-120	STAINLESS 304 STEEL	45	465
	XL-GH05F-120	STAINLESS 304 STEEL	45	465
	ZL-1702	STAINLESS 316 STEEL	50	463

Picture	Item Name		Door Weight (kg)/pair	Page
	ZL-1703	STAINLESS 316 STEEL	65	462

GRAVITY HINGES

Picture	Item Name		Door Weight (kg)/pair	Page
	ET-100A	STAINLESS 304 STEEL	-	466
	ET-100BF	STAINLESS 304 STEEL	-	466
	ET-100CD	STAINLESS 304 STEEL	-	467

LAMP®

The GS-G Series

Glass Showcase Fittings

Exquisitely coordinated brackets, hinges, and locks

SUGATSUNE

Total Design Coordination

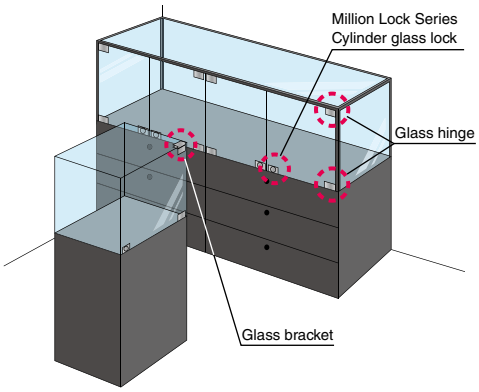

The unified flat design adds a sophisticated glamour to glass displays.

Outstanding Easy Installation

• Temporary holding feature allows the door to be installed easily by one person.

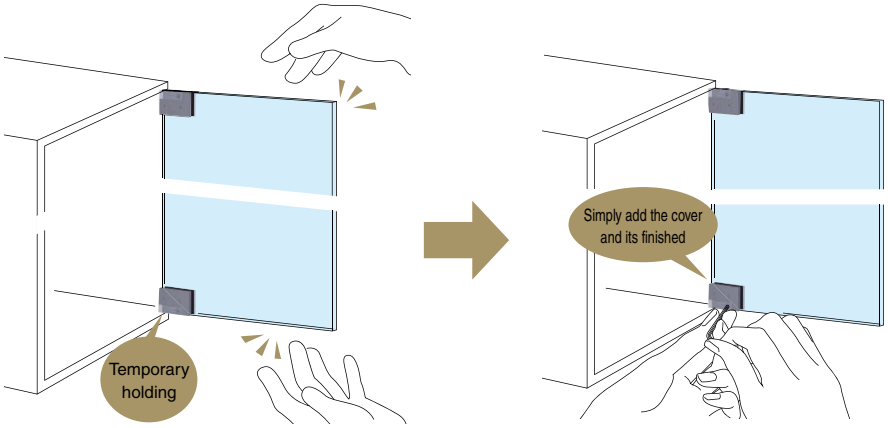

The hinges and brackets can temporarily hold the glass door after they are mounted.
This function makes it possible for a single person to install it easily.

• Easy horizontal adjustment after installation

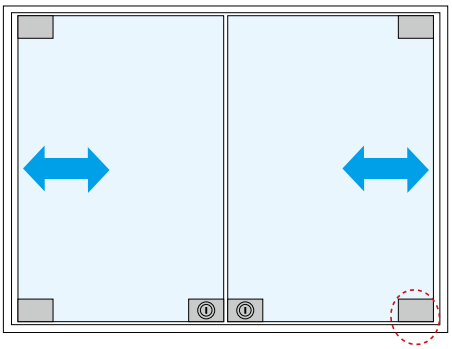

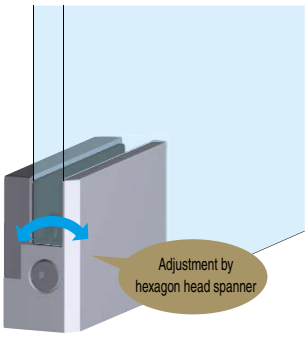

You can adjust the position of the glass door horizontally after installation by simply turning the screw.

Total Lock Function

A single key can be used on multiple locks

The Million Lock Series enables you to operate different cabinets with the same key.
(You need to order keys of the Million Lock Series which have the same number)

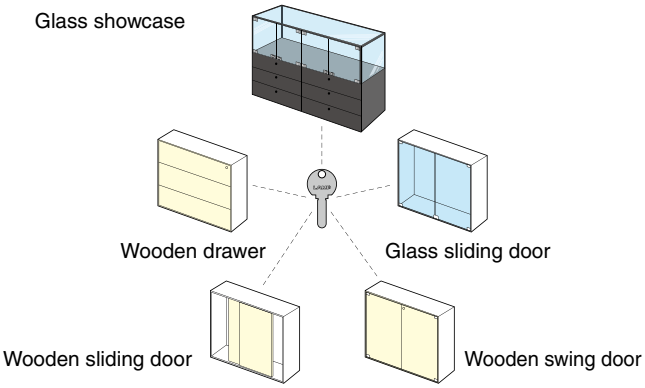

SUGATSUNE

Updated 2019.01.23

GLASS HINGE (INSET)

INSTRUCTION HEX KEY

GS-GH5

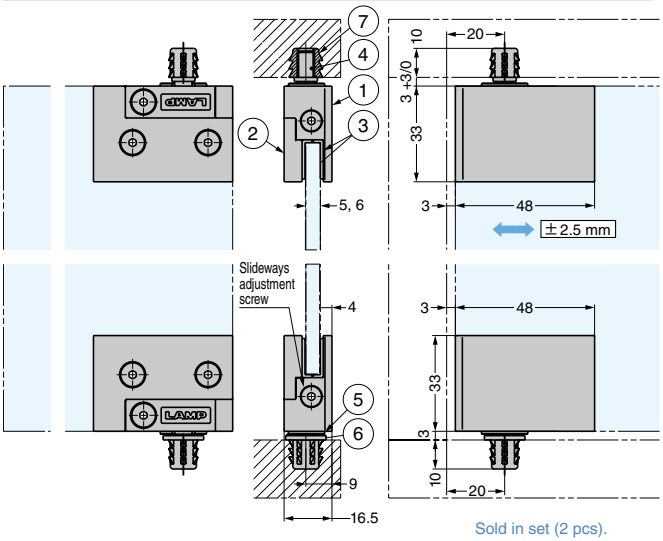

Features

- For inset glass doors
- Can be used together with glass bracket GS-GB5 and glass door lock GS-GL5 for a total design of your showcase.
- Temporary holding feature allows the door to be installed easily by one person.
- Sideways adjustment (±2.5 mm) possible after installation of the door.

Remarks

- Please refer to glass weight as the main reference when installing glass door.
- Please use different gasket supplied with item for 5 mm thickness glass door.
- Film for glass door is recommended for safe usage.
- Please prepare a door stop separately.

Parts included

- Gaskets
- Spanner Hex.2.5

Installation Drawings

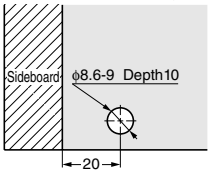

Top and bottom panel

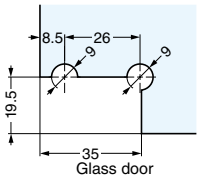

Glass door

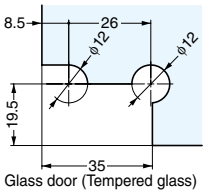

Glass door (Tempered glass)

Sold in set (2 pcs).

CAD	Item CD	Item Name	Finish/Colour	Door Width	Door Height	Glass Thickness	Door Weight N/set	Door Weight kgf/set	Box (sets)	Carton (sets)
2D 3D	170-037-123	GS-GH5-CR	Chrome	Max. 600 mm	Max. 900 mm	5, 6 mm	49	8	1	24
2D 3D	170-037-124	GS-GH5-GP	Gold (24K) Plated						1	24
2D 3D	170-042-197	GS-GH5-BL	Black						1	24

No.	Part Name	Material	Finish/Colour		
			CR	GP	BL
①	Body	Zinc Alloy (ZDC)	Chrome	Gold (24K) Plated	Black
②	Cover Plate				
③	Gasket	Chloroprene Rubber (CR)	Black		
④	Axis	Stainless Steel	Plain		
⑤	Plastic Washer	Polyamide (PA)	Black		
⑥	Metal Plate	Stainless Steel (SUS304)	Plain		
⑦	Insert	Zinc Alloy (ZDC)	–		

GLASS BRACKET

INSTRUCTION

GS-GB5

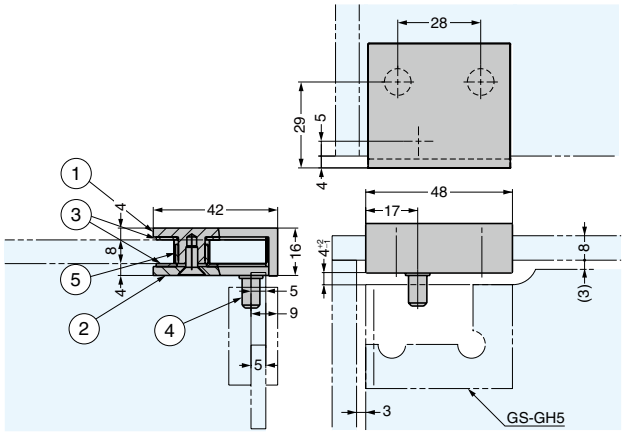

Drawing shows left side installation.

Features

- For use with glass hinge GS-GH5 for installation on cabinets with a glass top.
- Can be used together with glass hinge GS-GH5 and lock GS-GL5 for a complete unified design for your showcase.

Remarks

- Film for glass door is recommended for safe usage.
- Please prepare a door stop separately.

Installation Drawings

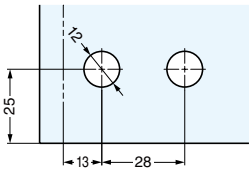

Top panel

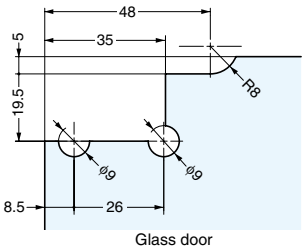

Glass door

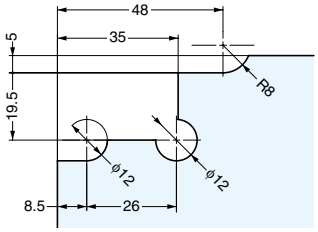

Glass door (Tempered glass)

CAD	Item Code	Item Name	Type	Finish	Glass Thickness	Box (pcs)	Carton (pcs)
–	170-037-125	GS-GB5-R-CR	Right Side	Chrome	8 mm	1	24
–	170-037-126	GS-GB5-L-CR	Left Side			1	24
–	170-037-127	GS-GB5-R-GP	Right Side	Gold (24K) Plated		1	24
–	170-037-128	GS-GB5-L-GP	Left Side			1	24
–	170-042-198	GS-GB5-R-BL	Right Side	Black		1	24
–	170-042-207	GS-GB5-L-BL	Left Side			1	24

No.	Part Name	Material	Finish/Colour		
			CR	GP	BL
①	Body	Zinc Alloy (ZDC)	Chrome	Gold (24K) Plated	Black
②	Plate	Stainless Steel (SUS430)			
③	Washer	Chloroprene Rubber (CR)	Black		
④	Axis	Stainless Steel	Plain		
⑤	Tube	Polyvinyl Chloride (PVC)	Clear		

GLASS HINGE (INSET)

INSTRUCTION HEX KEY

GS-GH20

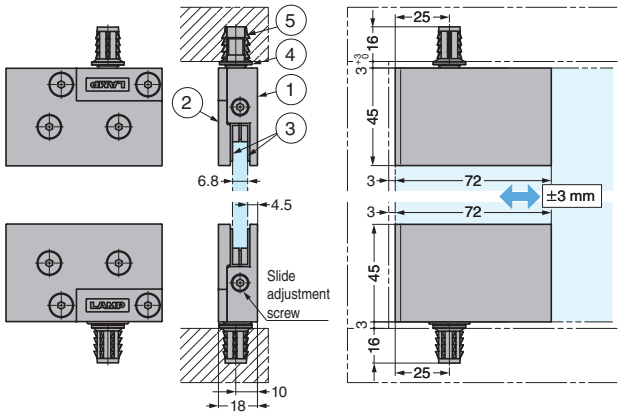

Features

- For inset glass doors
- Can be used together with glass bracket GS-GB20 and lock GS-GL20 for a total design of your showcase.
- Temporary holding feature allows the door to be installed easily by one person.
- Sideways adjustment (±2.5 mm) possible after installation of the door.

Remarks

- Glass door weight is preferred to door size.
- Please use different gaskets supplied with item for 6 mm thickness glass door.
- Film on glass door is recommended for safe usage.
- Prepare door stopper separately.

Parts supplied with set

- Gasket (For 6 mm thickness glass door)
- Spanner Hex.3

Installation Drawings

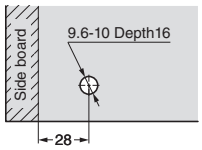

Top and bottom panel

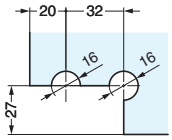

Glass door

No.	Part Name	Material	Finish/Colour
①	Body	Zinc Alloy (ZDC)	Chrome, Gold (24K) Plated, Black
②	Back Plate		
③	Gasket	Chloroprene Rubber (CR)	Black
④	Axis	Stainless Steel	Plain
⑤	Insert	Zinc Alloy (ZDC)	–

Sold in set (2 pcs).

CAD	Item Code	Item Name	Finish	Door Width (mm)	Door Height (mm)	Glass Thickness (mm)	Door Weight N/set	Door Weight kgf/set
2D 3D	170-041-445	GS-GH20-CR	Chrome	Max. 700	Max. 1,600	6, 8	196	20
2D 3D	170-041-446	GS-GH20-GP	Gold (24K) Plated					
2D 3D	170-041-447	GS-GH20-BL	Black					

GLASS BRACKET

INSTRUCTION

GS-GB20

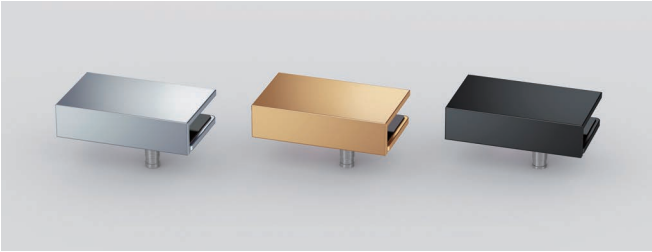

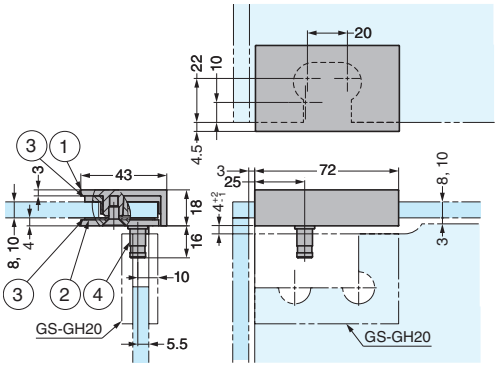

Drawing shows left side installation

Features

- For use with glass hinge GS-GH20 in case of glass top cabinet.
- Can be used together with glass hinge GS-GH20 and lock GS-GL20 for a total design of your showcase.

Remarks

- For use with glass hinge GS-GH20 for installation on cabinets with a glass top.
- Can be used together with glass hinge GS-GH20 and lock GS-GL20 for a complete unified design for your showcase.

Parts supplied with set

Gasket (For 8 mm thickness glass door)

Cut Out Dimensions

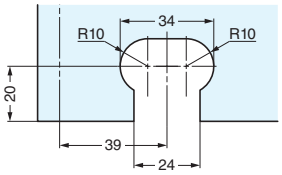

Glass top

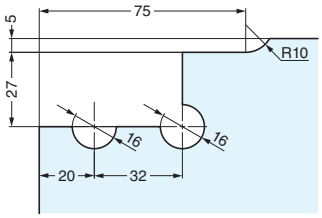

Glass door

No.	Part Name	Material	Finish/Colour
①	Body	Zinc Alloy (ZDC)	Chrome, Gold (24K) Plated, Black
②	Plate	Stainless Steel (SUS430)	
③	Gasket	Chloroprene Rubber (CR)	Black
④	Axis	Stainless Steel	Plain

CAD	Item Code	Item Name	Type	Finish	Glass Thickness (mm)
2D 3D	170-041-448	GS-GB20-R-CR	Right Side	Chrome	8, 10
2D 3D	170-041-449	GS-GB20-L-CR	Left Side		
2D 3D	170-041-450	GS-GB20-R-GP	Right Side	Gold (24K) Plated	
2D 3D	170-041-451	GS-GB20-L-GP	Left Side		
2D 3D	170-041-452	GS-GB20-R-BL	Right Side	Black	
2D 3D	170-041-453	GS-GB20-L-BL	Left Side		

GLASS HINGE (FOR INSET DOORS) Under Development INSTRUCTION TEMPERED GLASS GS-GH50

Features

- A hinge for inset doors in large glass display cases.
- Can be used with Million Lock Cylinder GS-GL50 Glass Lock to create a unified design for glass display cases.
- Temporary fastening mechanism holds the door in the frame temporarily, making the door easier to install than conventional products.
- Can be adjusted upward and horizontally.

Remarks

- Read all remarks on handling thoroughly before use.
- Prioritize the door weight when determining the glass size.

Sold in sets (2 pcs).

CAD	Item Code	Item Name	Finish	Glass Width (mm)	Glass Height (mm)	Glass Thickness (mm)	Load Capacity N/1Set	Load Capacity kgf/1Set
–	–	GS-GH50-CR	Chrome Plating	Max. 900	Max. 2500	8 - 12.7	490	50
–	–	GS-GH50-GP	24K Gold Plating					

STAINLESS STEEL GRAVITY HINGE FOR GLASS DOOR SUS TEMPERED GLASS XL-GH02AF-120

XL-GH02AF-120R

XL-GH02AF-120L (Reverse side view)

Features

- Can even be used for areas such as shower booths where water is used.
- Use a glass edge protector suitable for the installation area (sold separately).
- This product is the same shape as the XL-GH02F-120 Hinge for Stainless Steel Glass Door but does not automatically close.

Remarks

- Can be used in areas exposed to water such as shower booths.
- Use a glass edge protector suitable for the installation area (sold separately).
- This product is the same shape as the XL-GH02F-120 Hinge for Stainless Steel Glass Door but does not self-close.

Parts Included

Size M5 x 16 cross-recessed sash screws

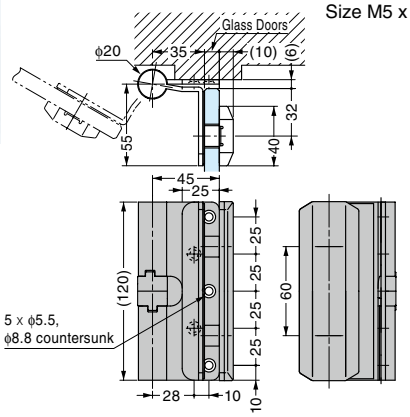

Left-hand opening shown. The right-handed opening is symmetrical.

Cut Out Dimensions

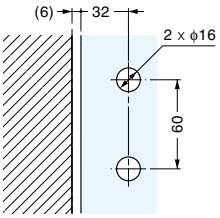

Sold in sets (2 pcs).

CAD	Item Code	Item Name	Type	Material	Finish	Door Width (mm) /1Set	Door Height (mm) /1Set	Glass Thickness (mm)	Load Capacity N/1Set	Load Capacity kgf/1Set
–	170-032-186	XL-GH02AF-120R	Right Side	Stainless Steel (SUS304)	Mirror	Max. 750	Max. 2000	10 - 12	441	45
–	170-032-185	XL-GH02AF-120L	Left Side							

STAINLESS STEEL GRAVITY HINGE FOR GLASS DOOR SUS TEMPERED GLASS GH-G02

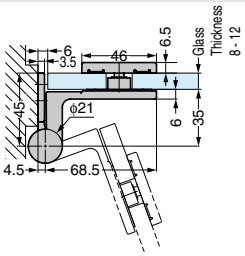

Features

- Can even be used for areas such as shower booths where water is used.
- The door closes automatically between 0° and about 70°.
- It opens automatically between about 70° and 160°. The door can be held open by placing a door stopper in this area.
- A maximum of about 3 mm rise occurs when open 70°.
- Use a glass edge protector suitable for the installation area (sold separately).
- To unify the finish of the screws, use our polished screws (sold separately, size M5 x 15 countersunk hex socket bolts, size M5 x 50 cross-recessed tapping screws) instead of the provided screws.

Remarks

- Read all remarks on handling thoroughly before use.
- Prioritize the load capacity when determining the glass size.
- The hinge does not hold the door in a fully closed or fully open position. To hold the door in place, install the 8851 Door Edge Seal with Magnet and 8880 Aluminium Profile for when fully closed, and a separately prepared door stopper when fully open.
- Contact your Sugatsune sales representative if the door is over 2000 mm high.

Parts Included

Size M5 x 14 cross-recessed flat head screws

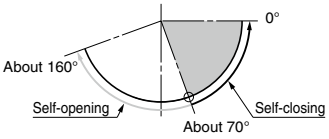

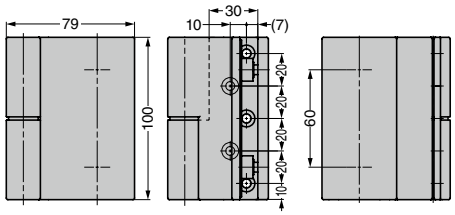

Left-hand opening shown. The right-handed opening is symmetrical.

Cut Out Dimensions

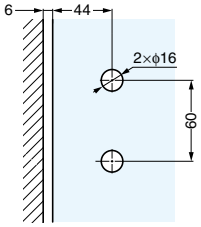

CAD	Item Code	Item Name	Type	Material	Finish	Door Width (mm)	Door Height (mm)	Glass Thickness (mm)	Load Capacity N/2 pcs	Load Capacity kgf/2 pcs	Opening Angle
–	170-037-581	GH-G02-R	Right Side	Stainless Steel (SCS13)	Mirror	Max. 800	Max. 2000	8 - 12	441	45	160°
–	170-037-582	GH-G02-L	Left Side								

STAINLESS STEEL GRAVITY HINGE FOR GLASS DOOR SUS TEMPERED GLASS GH-G07

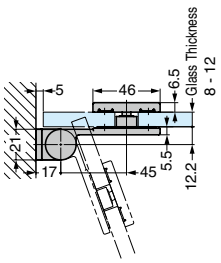

Features

- Can even be used for areas such as shower booths where water is used.
- The door closes automatically between 0° and about 70°.
- It opens automatically between about 70° and 160°. The door can be held open by placing a door stopper in this area.
- A maximum of about 3 mm rise occurs when open 70°.
- Use a glass edge protector suitable for the installation area (sold separately).
- To unify the finish of the screws, use our polished screws (sold separately, size M5 x 15 countersunk hex socket bolts, size M5 x 50 cross-recessed tapping screws) instead of the provided screws.

Remarks

- Read all remarks on handling thoroughly before use.
- Prioritize the load capacity when determining the glass size.
- The hinge does not hold the door in a fully closed or fully open position. To hold the door in place, install the 8851 Door Edge Seal with Magnet and 8880 Aluminium Profile for when fully closed, and a separately prepared door stopper when fully open.
- Contact your Sugatsune sales representative if the door is over 2000 mm high.

Parts Included

Size M5 x 14 cross-recessed flat head screws

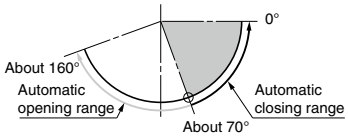

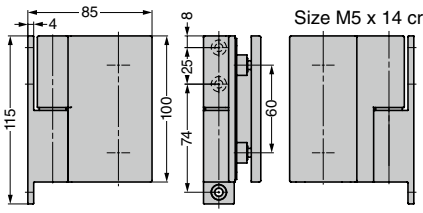

Left-hand opening shown. The right-handed opening is symmetrical.

Glass Dimensions

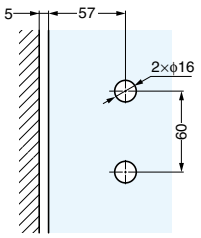

CAD	Item Code	Item Name	Type	Material	Finish	Door Width (mm)	Door Height (mm)	Glass Thickness (mm)	Load Capacity N/2 pcs	Load Capacity kgf/2 pcs	Opening Angle
–	170-037-583	GH-G07-R	Right Side	Stainless Steel (SCS13)	Mirror	Max. 800	Max. 2000	8 - 12	441	45	160°
–	170-037-584	GH-G07-L	Left Side								

GLASS DOOR BRACKET

L=R INSTRUCTION STEEL

HES3D-G90BKT

Features

- Glass door bracket for HES3D-90 series (P.470).
- Screw covers match the bracket with the finish.

Parts Included

- Hexagon socket countersunk head screw M5 x 12
- Countersunk head screw M4 × 12
- Screw covers
- Hex key size 3

Door Dimensions and Number of Hinges

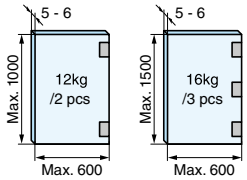

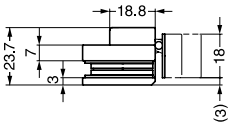

Cut Out Dimensions

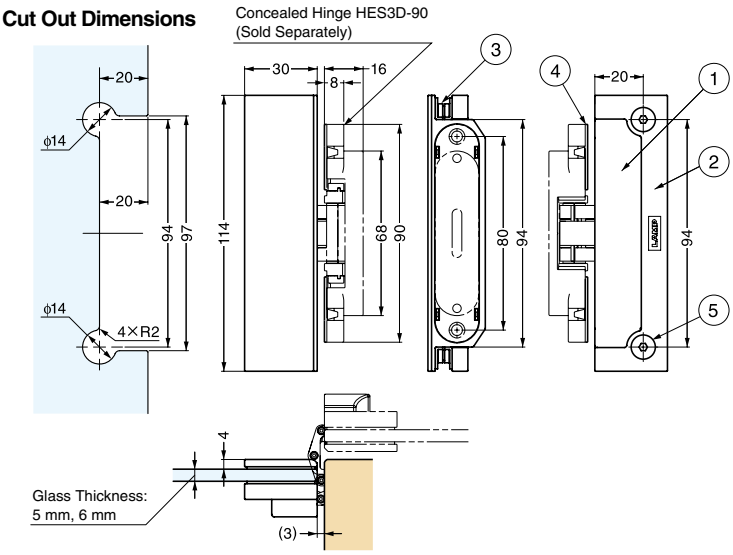

No.	Part Name	Material	Finish		
			CR	GP	BL
①	Body	Zinc Alloy (ZDC)	Chrome	24K Gold plating	Black Enamel Finish
②	Back Plate				
③	Gasket	Chloroprene Rubber (CR)	–	–	–
④	Screw Cover	ABS	Chrome	24K Gold plating	Black
⑤	Hexagon Socket Countersunk Head Screw M5 x 12	Steel			Black Enamel Finish

CAD	Item Code	Item Name	Colour	Weight (g)	Box (pcs)	Carton (pcs)
2D 3D	170-035-802	HES3D-G90BKT-CR	Silver	245	2	24
2D 3D	170-035-803	HES3D-G90BKT-GP	Gold	245	2	24
2D 3D	170-035-804	HES3D-G90BKT-BL	Black	245	2	24

3-WAY ADJUSTABLE CONCEALED HINGE

INSTRUCTION

HES3D-70

Features

- Small HES series can be applied with Min. door thickness of 19 mm.
- Small bore depth, easy to cut out the door and frame.
- 3-way adjustment function allows vertical, horizontal, and depth adjustment after hinge installed.
- Hinge can be split into the door side and the frame side.

Remarks

- Can not be used with LAPCON DOOR DAMPER LDD or LAPCON DOOR CLOSER LDC-N2.
- Use below opening angle 180°.

Parts Included

- Countersunk head tapping screw 4 × 20 (4 pcs/hinge) SUS
- Hex key 2

Figure below shows the state with the upper screw covers removed.

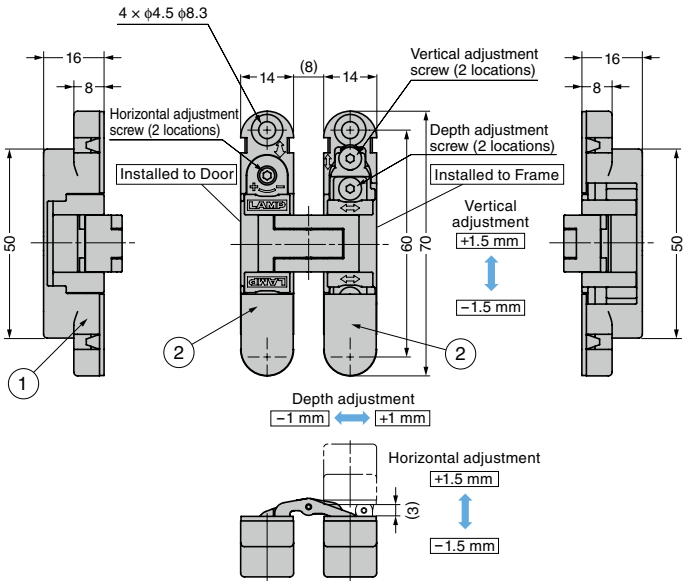

Locus Chart

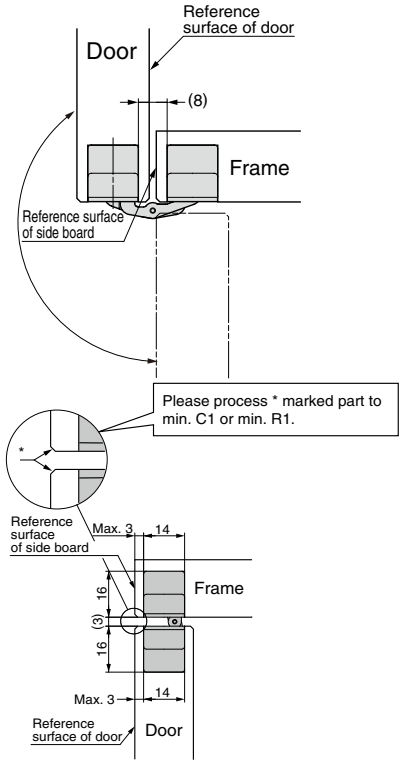

Cut Out Dimensions

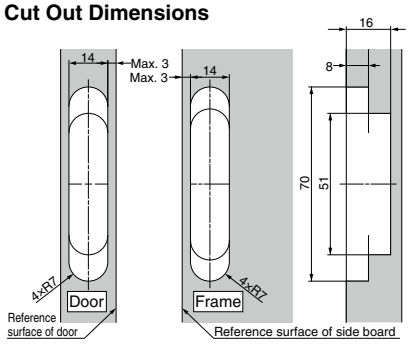

No.	Part Name	Material	Finish		
			DC	DN	BL
①	Body	Zinc Alloy (ZDC)	Satin Chrome	Dull Nickel	Black Paint
②	Cover (2 pairs)	ABS	Silver Paint	Champagne Gold Paint	Black

CAD	Item Code	Item Name	Colour	Door Width (mm)	Door Height (mm)	Door Thickness (mm)	Door Weight kg/2 pcs	Door Weight kg/3 pcs	Opening Angle	Weight (g)	Box (pcs)	Carton (pcs)
2D 3D	170-035-441	HES3D-70DC	Silver	Max. 600	Max. 1200	Min. 19	Max. 9	Max. 12	180°	95	2	48
2D 3D	170-035-442	HES3D-70DN	Champagne Gold								2	48
2D 3D	170-035-443	HES3D-70BL	Black								2	48

3-WAY ADJUSTABLE CONCEALED HINGE

Under Development | INSTRUCTION | HEX KEY | VIDEO

HES3D-E160

Features

- Shallow drilling depth enables easy drilling of the door and frame.
- Three-way adjustment feature enables fine adjustment up, down, left, right, forward and back.
- The hinge can be divided between the door and frame and the door can be temporarily fastened to the frame, making it easy to hang the door.
- The structure is designed to prevent the door from sagging.
- Screw covers can be purchased separately in the event that the original covers are broken or lost. Contact us for details.

Remarks

- Read all remarks on handling thoroughly before use.
- When using with a door damper and/or closer, select the LAPCON LDD-S Door Damper, LAPCON LDD-V Door Damper and/or LAPCON LDC-N2 Closer.
- Select a door weight within a range satisfying the conditions of both the hinge and the door damper and/or closer.
- Some closers may cause the door to move awkwardly or not close fully. Test the product before purchase.
- When using a closer with a stopper, be sure to use a door stopper too (floor mounting type, wall mounting type, etc.). Install the door stopper in a position further forward than the stopper of the closer, and between the centre and end of the door.

Parts Included

- Size 5 x 25 cross-recessed flat head tapping screws (stainless steel) (8 screws per hinge)
- Nominal size 4 hex bar spanner

This figure shows this product with the upper screw cover removed.

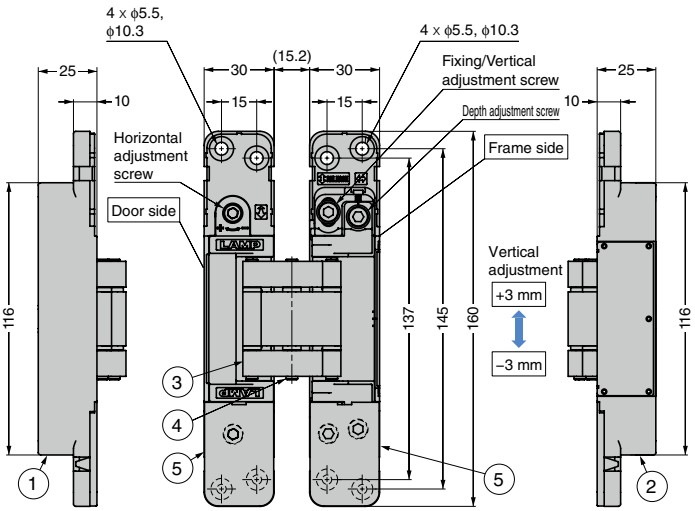

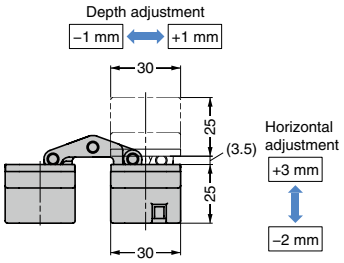

Installation Drawing

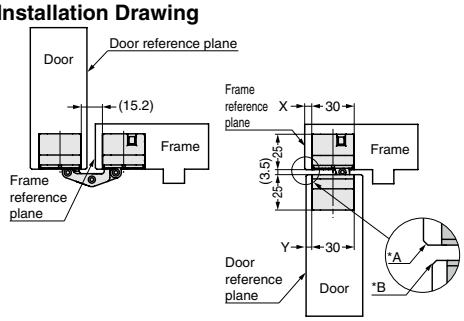

*The door and frame need to be chamfered based on the machining margin.

Y: Door machining margin	B: Door chamfering	X: Frame machining margin	A: Frame chamfering
4	1	5	1
4	2	6	2
4	2	7	3
5	3	5	3
5	3	6	4

(Reference values)

Cut Out Dimensions

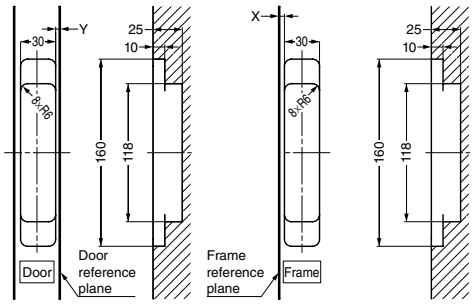

No.	Part Name	Material	Finish/Colour DC	Finish/Colour DN	Finish/Colour BL
①	Body	Zinc Alloy (ZDC)	Satin Chrome	Satin Nickel	Baked Enamel Finish/ Black
②	Base Frame				
③	Arm	Aluminium Alloy			
④	Shaft	Stainless Steel	Plain	Plain	Plain
⑤	Screw Covers	ABS	Satin Chrome	Satin Nickel	Black

Video: Features

CAD	Item Code	Item Name	Colour	Door Width (mm)	Door Height (mm)	Door Thickness (mm)	Opening Angle
2D 3D	170-041-454	HES3D-E160DC	Silver	Max. 900	Max. 2400	Min. 36	180°
2D 3D	170-041-455	HES3D-E160DN	Champagne Gold				
2D 3D	170-041-456	HES3D-E160BL	Black				

3-WAY ADJUSTABLE CONCEALED HINGE INSTRUCTION VIDEO HES3D-V135LGR

Features

- Small bore depth for compact assembly.
- 3-way adjustment function allows vertical, horizontal, and depth adjustment after hinge installed.
- Easy installation: Hinge can be split into the door side and the frame side and has temporary door holding feature.
- Unique seven link structure helps to prevent door sagging.

Remarks

- Our original new link arm mechanism provides different locus from other products of the same series. Please confirm the position where the door is opened by 90°on the left figure.
- Can be used with Sugatsune door damper/door closer shown below. Please check and follow product specifications.
  - LAPCON DOOR DAMPER LDD-S
  - LAPCON DOOR DAMPER LDD-V
  - LAPCON DOOR CLOSER LDC-N2
- Using with other door closers might lead to hinge damage.
- For using Sugatsune door closer, please install the door holder separately at the stop position.

Parts Included

Binding head tapping screw 5 × 15

Option

Installation template HES3D-V135-TMP

Locus Chart

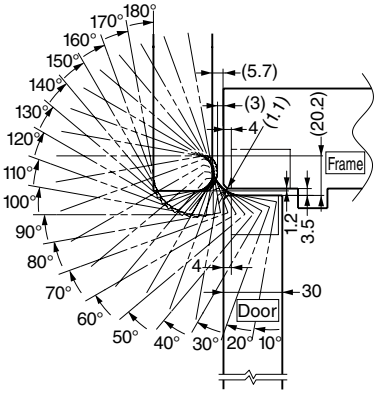

Video Link

Motion Design Tec Video
Locus & Open/Close Angle

Cut Out Dimensions

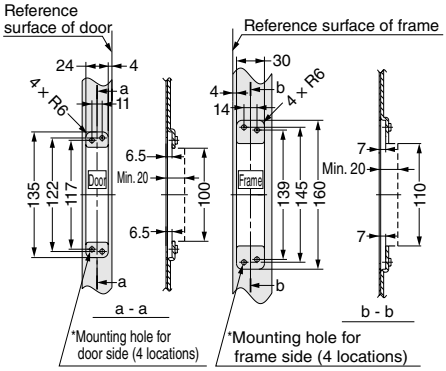

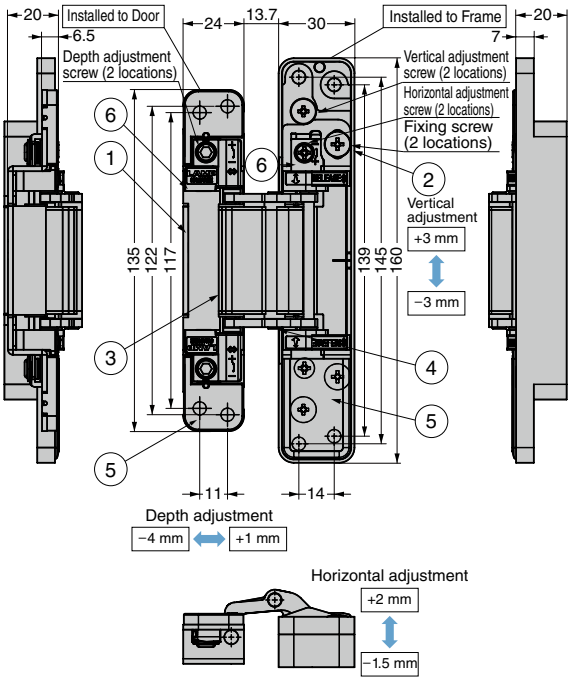

Installation

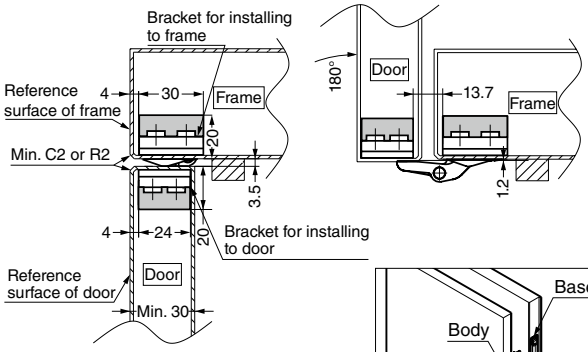

Temporary Holding Feature

1. Hinge can be split into the body and base frame. Install the body to the door and the base frame to the frame.
2. Push the hinge body horizontally into the base frame in the direction of the arrow. The door is held to the frame duo to the temporary holding feature.
3. Temporarily tighten the fixing screws and adjust the door position.
4. After adjustment, tighten the fixing screws completely to fix the hinge body.

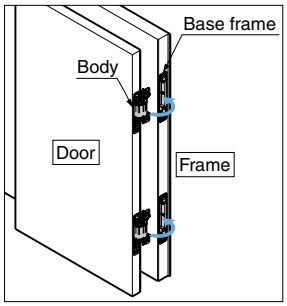

No.	Part Name	Material	Finish / Colour
①	Body	Steel	Nickel
②	Base Frame	POM	Light Grey
③	Arm	Aluminium Alloy	Anodised Silver
④	Shaft	Steel	Nickel
⑤	Cover	POM	Light Grey
⑥	Adjustment Block	Zinc Alloy (ZDC)	Nickel

CAD	Item Code	Item Name	Door Width	Door Height	Door Thickness	Frame Thickness	Door Weight kg/2 pcs	Door Weight kg/3 pcs	Opening Angle	Weight (g)	Box (pcs)	Carton (pcs)
3D	170-020-804	HES3D-V135LGR	Max. 900	Max. 2400	Min. 30	Min. 20	Max. 40	Max. 55	180°	400	2	24

DAMPER HINGE

Lapcon INSTRUCTION

HG-JHM11

Black

White

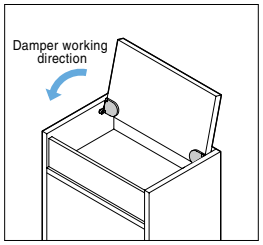

Features

- Hinge with built-in damper.
- Damper unit works to close door softly. Smooth movement in opening direction.
- Mounted in sideboard and installed in inset door.
- Applicable into surface mount with Bracket UTZ11-BL.
- Cover hides mounting screws for clean appearance.
- Easy to cut out with a router.

Specification

Operation temperature: 0°C - 40°C

Application

Small covers for machine or wire manager.

Remarks

- Applicable moment of door: 0.05 - 0.4 N·m. Use a pair/door.
- When installing, ensure that both hinge shafts are levelled and alighted.
- Damper mechanism works when opening the lid by about 60° or more. Otherwise, damper may not work.
- Prepare stopper separately to keep the lid closed.
- Closing speed may change depending on operating temperature.

Sold Separately

Bracket for Surface Mount UKZ11-BL

Recommended Screw

Countersunk tapping screw 3, bind tapping screw 4

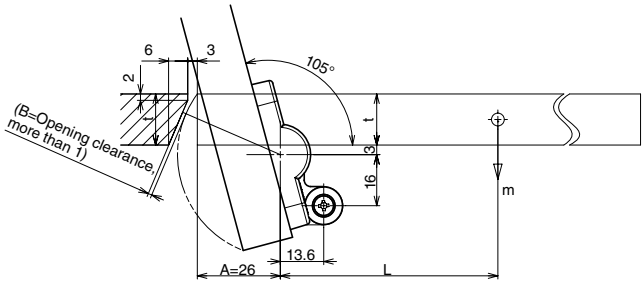

*t =16. Prepare more than 1 for Gap B of Opening clearance.

Selection Tool Sasuga-kun Applicable Products
Used for Product Selection & Simulation. Available on Web!

Installation

Cross-section View

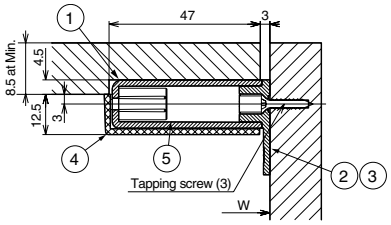

Installed Position of Bracket

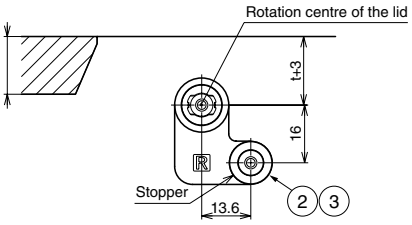

Top View When closed door

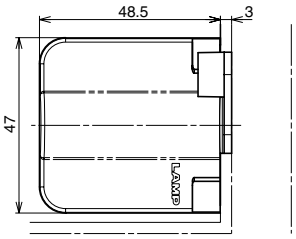

Cut Out Dimensions

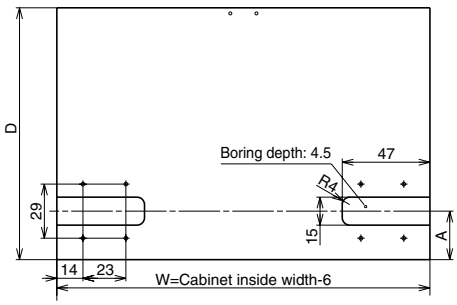

No.	Part Name	Material	Colour
①	Body	Polyacetal (POM)	Black
②	Bracket for side mount R	PBT	
③	Bracket for side mount L		
④	Cover	ABS	Black/White
⑤	Damper	–	–

Surface Mount Type (optional bracket UKZ11-BL for surface mount is required)

Cross-section View

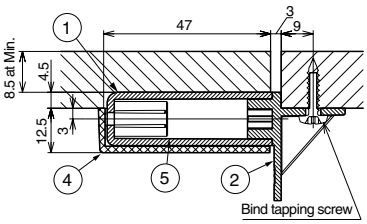

Installation Position of Bracket

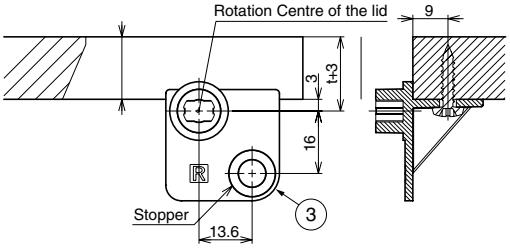

Top View

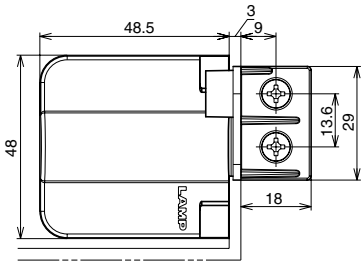

Cut Out Dimensions

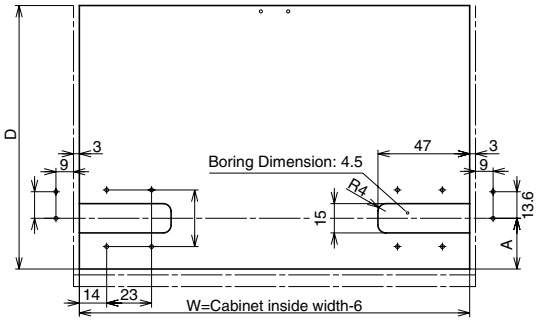

No.	Part Name	Material	Colour
①	Body	Polyacetal (POM)	Black
②	Bracket for sidemount R	PBT	
③	Bracket for sidemount L		
④	Cover	ABS	Black/White
⑤	Damper	–	–

Hinge

Sold by set.

CAD	Item Code	Item Name	Colour	Torque N·m/pair	Torque kgf·cm/pair	Opening Angle	Weight (g)	Box (set)	Carton (set)
2D 3D	170-041-206	HG-JHM11-1BL	Black	0.05 – 0.1	0.51 – 1.02	105°	43.9	25	275
2D 3D	170-041-207	HG-JHM11-1WT	White						
2D 3D	170-041-208	HG-JHM11-2BL	Black	0.1 – 0.2	1.02 – 2.04				
2D 3D	170-041-209	HG-JHM11-2WT	White						
2D 3D	170-041-210	HG-JHM11-3BL	Black	0.2 – 0.29	2.04 – 2.96				
2D 3D	170-041-211	HG-JHM11-3WT	White						
2D 3D	170-041-212	HG-JHM11-4BL	Black	0.29 – 0.4	2.96 – 4.08		46.8		
2D 3D	170-041-213	HG-JHM11-4WT	White						

Bracket for Surface Mount

CAD	Item Code	Item Name	Colour	Box (set)	Carton (set)
2D 3D	170-041-218	UKZ11-BL	Black	50	500

DAMPER HINGE (SURFACE MOUNT TYPE) Lapcon INSTRUCTION VIDEO HG-JHM20T

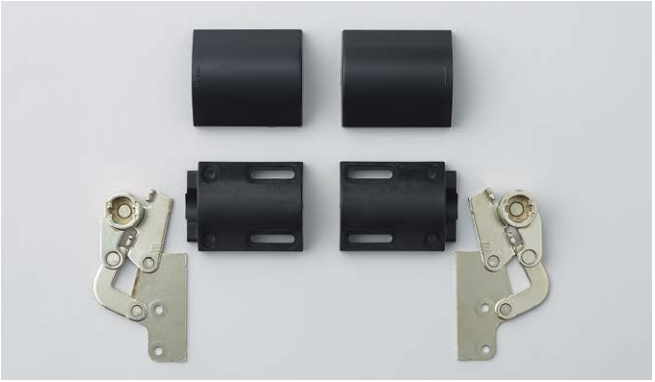

W/ black cover

Sold in pairs.

W/ white cover

Assembly example

Features

- Newly-added surface mount type: Easy to install without the need of recessing.
- Hinge with built-in damper UDH.
- Soft-close and smooth-open features.
- For Inset Lid.
- Cover hides mounting screws.

Remarks

- Sold in pairs.
- Below torque range is the value when using a pair of hinges (left and right) per lid.
- When installing, ensure that both hinge shafts are levelled and aligned.
- Damper mechanism works when opening the top-opening lid by about 60° or more. Otherwise, the damper may not work.

Parts Included

- Hinge plate mounting screws: binding head tapping screw 3.5 x 14 (nickel) 4 pcs
- Bracket mounting screws: binding head tapping screw 3.5 x 20 (nickel) 8 pcs

Chrome finished cover

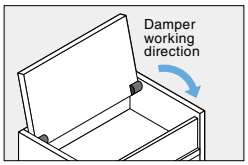

No.	Part Name	Material	Finish/Colour
①	Hinge Plate	Steel (SPCC)/Zinc Alloy (ZDC)	Nickel
②	Bracket	POM	Black
③	Cover	ABS	Black/White/Chrome
④	Damper	–	Bearing Right-handed: Grey, Left-handed: Natural

Front View

Top-opening lid closed

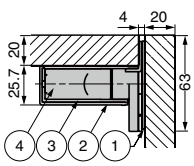

Top-opening lid opened by 90°

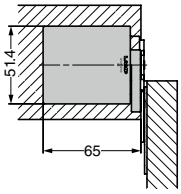

* Right-handed type shown. Left-handed type is symmetrical.

Installation

Standard

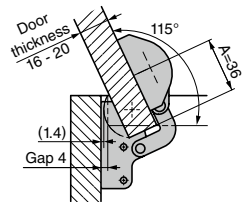

Chamfered lid edge

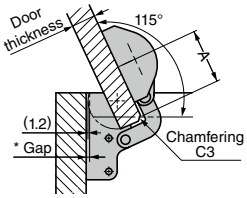

* Gap is decreased compared with standard when chamfered.

Door thickness	Standard		Chamfered Lid Edge	
	Size A	Gap	Size A	Gap
16	36	4	38	2
18			37	3
20			–	–

Door Weight Selection

Door Length (D)	Door Weight (*m*)
250	5.61 - 7.48 kg
300	4.57 - 6.09 kg
350	3.85 - 5.13 kg
400	3.33 - 4.43 kg
450	2.93 - 3.90 kg

Selection Tool Sasuga-kun Applicable Products

Used for Product Selection & Simulation. Available on Web!

Video Link

Hinge Plate Installation Position Cut Out Dimensions

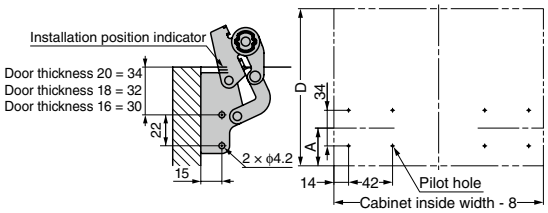

Calculation of maximum door moment (for homogeneous material)

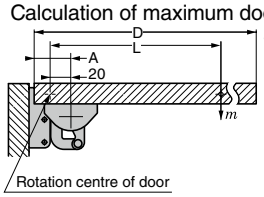

$$T = m \times 9.80665 \times L \times \frac{1}{1000}$$

T : Max. door torque (N·m)
m : Door weight (kg)
L : Distance from rotation centre to door centre of gravity (mm)

$$L = \frac{D}{2} - A + 20\ *$$

D : Door length (mm)
A : Bracket installation dimension (mm) (The range of A is about 36mm - 38mm)
* (Formula for assuming that the centre of gravity is in the centre of door)

* For heterogeneous door (e.g., attached with a mirror), please refer to our website > Selection Tool Sasuga-kun > "What is the centre of gravity? What is moment?" page.

CAD	Item Code	Item Name	Finish/Colour	Torque N·m/pair	Torque kgf·cm/pair	Marking Colour (Base Side)	Weight (g)	Box (pairs)	Carton (pairs)
2D 3D	170-036-328	HG-JHM20T-80BL	Black	6 - 8	61.2 - 81.6	Yellow	–	–	–
2D 3D	170-036-329	HG-JHM20T-80WT	White				–	–	–
2D 3D	170-036-839	HG-JHM20T-80CR	Chrome				–	–	–

ALL STAINLESS STEEL TORQUE HINGE

SUS VIDEO

HG-TAS

Features

Stainless steel construction suitable for corrosive environments.

Specifications

Operating temperature: 0°C - 40°C

Applications

LCD, monitoring camera, etc.

Remarks

Torque hinge made entirely from stainless steel, making it suitable for use in corrosive environments.

Selection Tool Sasuga-kun Applicable Products
Used for Product Selection & Simulation.
Available on Web!

Video Link

Application Example

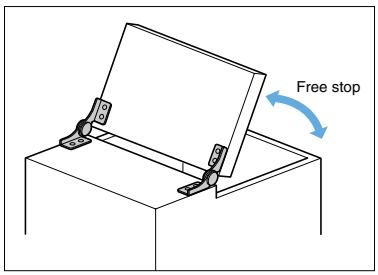

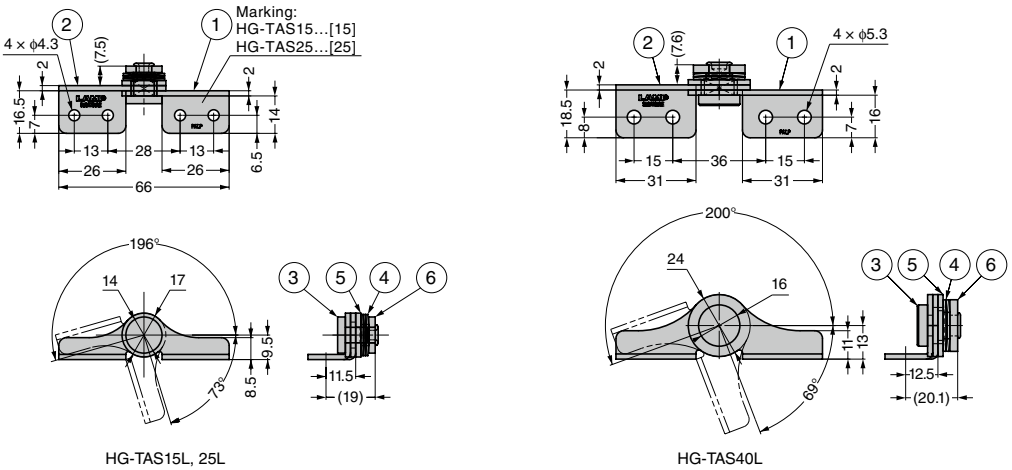

HG-TAS15L, 25L

HG-TAS40L

Left-handed type shown. Right-handed type is symmetrical.

No.	Part Name	Material	Finish
①	Body	Stainless Steel (SUS304)	Barrel Polished
②	Base		
③	Shaft	Stainless Steel (SUS303)	–
④	Spring Washer	Stainless Steel (SUS304)	
⑤	Plate		Barrel Polished
⑥	Washer	Stainless Steel (SUS430)	

CAD	Item Code	Item Name	Type	Torque N·m/pc	Torque kgf·cm/pc	Weight (g)	Box (pcs)	Carton (pcs)
2D 3D	170-037-294	HG-TAS15R	Right	1.5±20%	15.3±20%	37	40	320
2D 3D	170-037-295	HG-TAS15L	Left			37	40	320
2D 3D	170-037-296	HG-TAS25R	Right	2.5±20%	25.5±20%	38	40	320
2D 3D	170-037-297	HG-TAS25L	Left			38	40	320
2D 3D	170-037-298	HG-TAS40R	Right	4.0±20%	40.8±20%	64	20	160
2D 3D	170-037-299	HG-TAS40L	Left			64	20	160

ADJUSTABLE ALL STAINLESS STEEL TORQUE HINGE SUS HG-TASJ40

Features

- Torque adjustable from 0 to 4 N·m.
- Stainless steel construction suitable for corrosive environments.

Specifications

Operating temperature: 0°C - 40°C

Remarks

- Torque adjustable from 0 to 4 N·m.
- Torque hinge made entirely from stainless steel, making it suitable for use in corrosive environments.

Selection Tool Sasuga-kun Applicable Products
Used for Product Selection & Simulation. Available on Web!

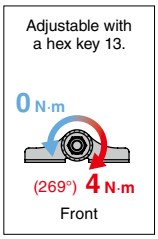

Application Example

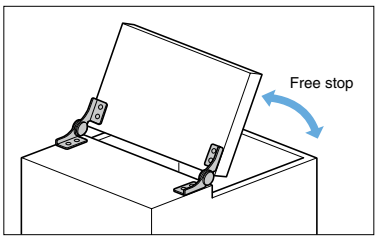

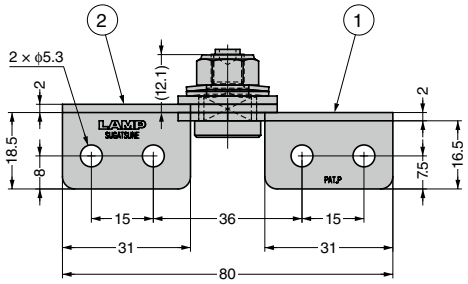

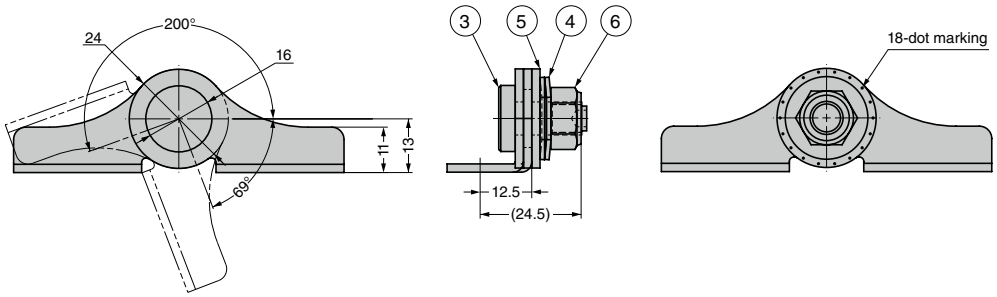

Left-handed type shown. Right-handed type is symmetrical.

No.	Part Name	Material	Finish
①	Body	Stainless Steel (SUS304)	Barrel Polished
②	Base		
③	Shaft	Stainless Steel (SUS303)	–
④	Spring Washer	Stainless Steel (SUS304)	
⑤	Plate		Barrel Polished
⑥	Lock Nut	Stainless Steel	–

CAD	Item Code	Item Name	Type	Torque N·m/pc	Torque kgf·cm/pc	Weight (g)	Box (pcs)	Carton (pcs)
2D 3D	170-037-306	HG-TASJ40R	Right	0 - 4.0	0 - 40.8	64	20	160
2D 3D	170-037-307	HG-TASJ40L	Left			64	20	160

ALL STAINLESS STEEL TORQUE HINGE

SUS VIDEO

HG-TBS

Features

Stainless steel construction suitable for corrosive environments.

Specifications

Operating temperature: 0°C - 40°C

Applications

LCD, monitoring camera, etc.

Remarks

Torque hinge made entirely from stainless steel, making it suitable for use in corrosive environments.

Video Link

Selection Tool Sasuga-kun Applicable Products
Used for Product Selection & Simulation.
Available on Web!

Application Example

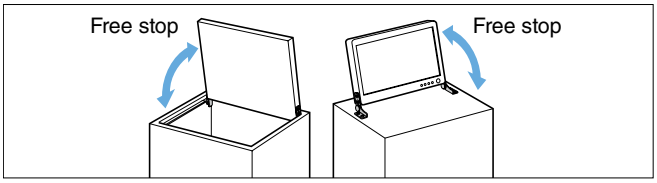

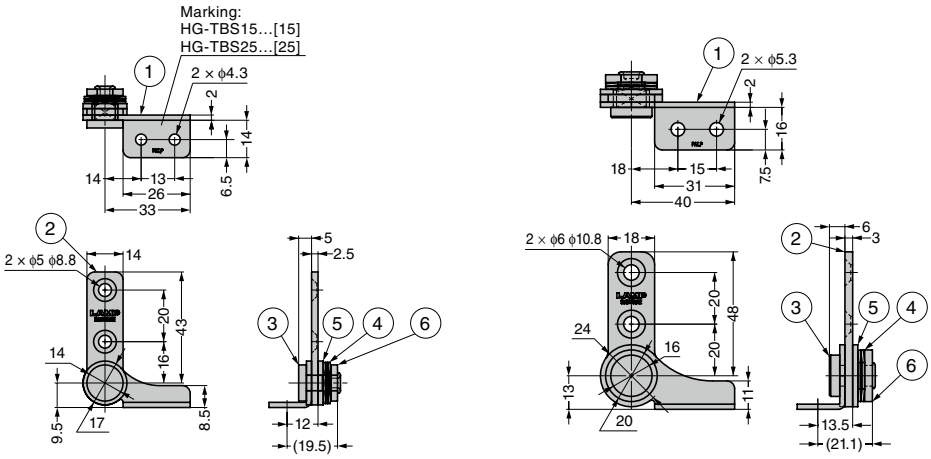

HG-TBS15L, HG-TBS25L

HG-TBS40L

Left-handed type shown. Right-handed type is symmetrical.

No.	Part Name	Material	Finish
①	Body	Stainless Steel (SUS304)	Barrel Polished
②	Base		
③	Shaft	Stainless Steel (SUS303)	–
④	Spring Washer	Stainless Steel (SUS304)	
⑤	Plate		Barrel Polished
⑥	Washer	Stainless Steel (SUS430)	

CAD	Item Code	Item Name	Type	Torque N·m/pc	Torque kgf·cm/pc	Opening Angle	Weight (g)	Box (pcs)	Carton (pcs)
2D 3D	170-037-300	HG-TBS15R	Right	1.5±20%	15.3±20%	360°	37	40	320
2D 3D	170-037-301	HG-TBS15L	Left				37	40	320
2D 3D	170-037-302	HG-TBS25R	Right	2.5±20%	25.5±20%		38	40	320
2D 3D	170-037-303	HG-TBS25L	Left				38	40	320
2D 3D	170-037-304	HG-TBS40R	Right	4.0±20%	40.8±20%		67	20	160
2D 3D	170-037-305	HG-TBS40L	Left				67	20	160

ADJUSTABLE ALL STAINLESS STEEL TORQUE HINGE SUS HG-TBSJ40

Features

- Torque adjustable from 0 to 4 N·m.
- Stainless steel construction suitable for corrosive environments.

Specifications

Operating temperature: 0°C - 40°C

Remarks

- Torque adjustable from 0 to 4 N·m.
- Torque hinge made entirely from stainless steel, making it suitable for use in corrosive environments.

Selection Tool
Sasuga-kun
Applicable Products
Used for Product Selection & Simulation.
Available on Web!

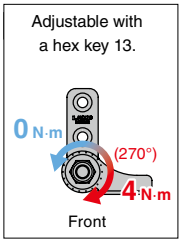

Application Example

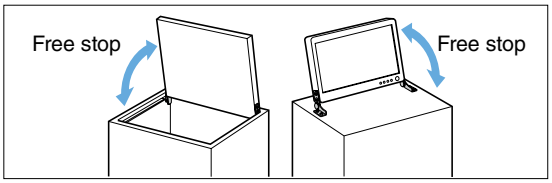

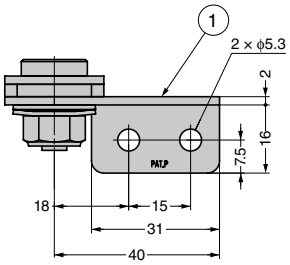

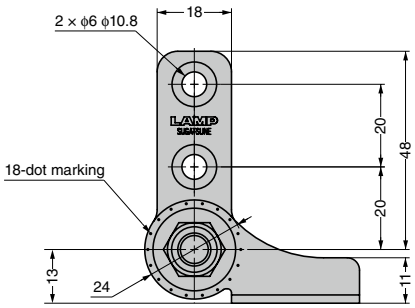

Left-handed type shown. Right-handed type is symmetrical.

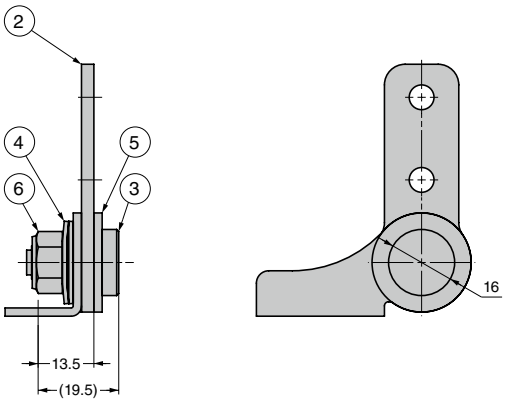

No.	Part Name	Material	Finish
①	Body	Stainless Steel (SUS304)	Barrel Polished
②	Base		
③	Shaft	Stainless Steel (SUS303)	–
④	Spring Washer	Stainless Steel (SUS304)	
⑤	Plate		Barrel Polished
⑥	Lock Nut	Stainless Steel	–

CAD	Item Code	Item Name	Type	Torque N·m/pc	Torque kgf·cm/pc	Opening Angle	Weight (g)	Box (pcs)	Carton (pcs)
2D 3D	170-037-308	HG-TBSJ40R	Right	0 - 4.0	0 - 40.8	360°	67	20	160
2D 3D	170-037-309	HG-TBSJ40L	Left				67	20	160

LIFT-OFF TORQUE HINGE

SUS **HG-KNT**

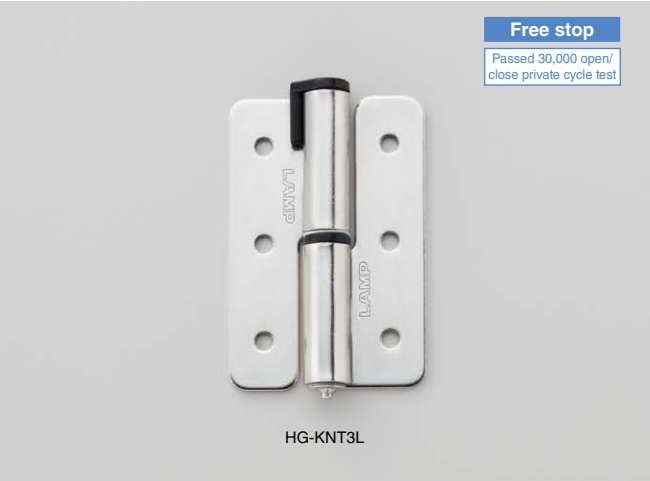

HG-KNT3L

Features

- Can be used vertically and horizontally.
- Lift-off type, easy to detach doors.

Applications

Laboratory equipment, OA equipment, FA equipment, and various automatic equipment.

Selection Tool Sasuga-kun Applicable Products
Used for Product Selection & Simulation. Available on Web!

Remarks

- When installing, ensure that both hinge shafts are aligned.
- Insert into holder following installation of the door.Infirm insertion may cause damage.
- When using the hinges horizontally, set the holders opposite each other to prevent them being inserted or removed.

Assembly

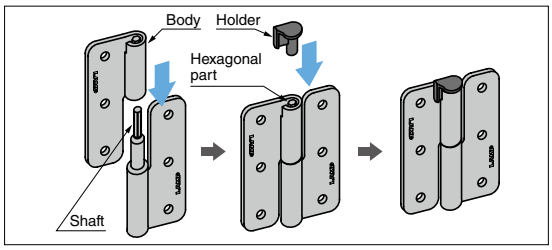

Insert the body into shaft, and then insert the holder into the hexagonal part of shaft to generate torque. To detach, use a tool to push the holder out.

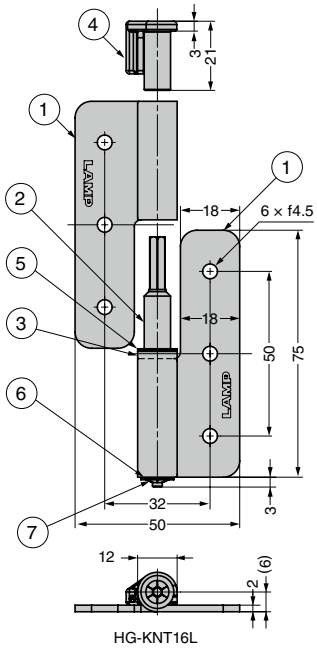

HG-KNT16L

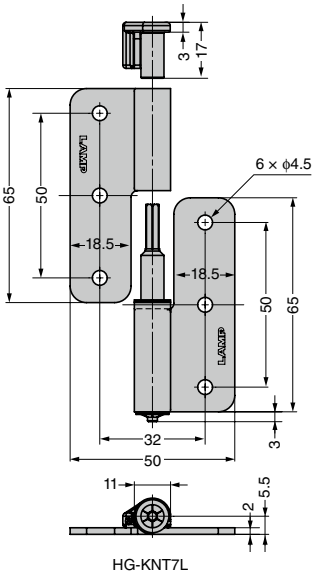

HG-KNT7L

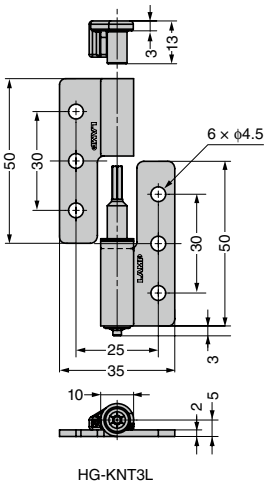

HG-KNT3L

Left-handed type shown. Right-handed type is symmetrical.

No.	Part Name	Material	Finish / Colour
①	Body	Stainless Steel (SUS304)	Barrel Polished
②	Shaft		–
③	Plug	POM	Black
④	Holder	PA	
⑤	Washer	PTFE	Natural
⑥	Washer	POM	
⑦	Push Nut	Stainless Steel	–

CAD	Item Code	Item Name	Type	Torque N·m/pc	Torque kgf·cm/pc	Weight (g)	Box (pcs)	Carton (pcs)
–	170-035-380	HG-KNT3L	Left-handed	$0.3^{\pm0.2}$	$3.1^{\pm2.0}$	42	50	200
–	170-035-381	HG-KNT3R	Right-handed				50	200
–	170-035-382	HG-KNT7L	Left-handed	$0.7^{\pm0.25}$	$7.1^{\pm2.6}$	76	50	200
–	170-035-383	HG-KNT7R	Right-handed				50	200
–	170-035-384	HG-KNT16L	Left-handed	$1.6^{\pm0.3}$	$16.3^{\pm3.1}$	96	30	120
–	170-035-385	HG-KNT16R	Right-handed				30	120

TORQUE HINGE (OUTDOORS TYPE)

Under Development | SUS316 | HG-TWP

* The shape of body is different from actual item. Refer to the drawings for details.

Features

- Ideal for exterior application.
- O-rings at the shaft part prevent invasion of water and dust.

Specifications

Operating temperature: 0°C - 40°C

Remarks

- Durable torque hinge suitable for use in exterior applications.
- O-rings at the shaft prevent intrusion of water and dust.
- Use all mounting holes.
- When installing, ensure that both hinge shafts are levelled and aligned.

Application Example

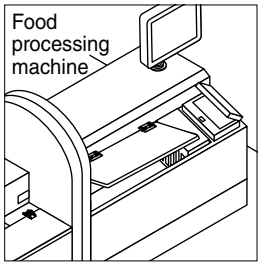

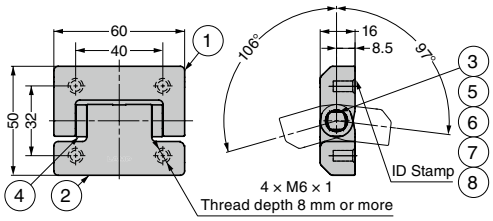

No.	Part Name	Material
①	Bracket	Stainless Steel (SUS316)
②	Base	
③	Shaft	
④	Plug	POM
⑤	O-ring (Outside)	Rubber
⑥	O-ring (Inside)	
⑦	Spring Pin	Stainless Steel (SUS304)
⑧	Hexagon Socket Set Screw	

CAD	Item Code	Item Name	ID Stamp	Torque N·m/pc	Torque kgf·cm/pc	Weight (g)	Box (pcs)	Carton (pcs)
–	170-037-310	HG-TWP15	15	1.5	15.3	–	–	–
–	170-037-311	HG-TWP30	30	3.0	30.6	–	–	–

TORQUE HINGE

SUS | HG-ITHP

Features

- Suitable for use in heat-generating environment.

Specifications

- Operating temperature: 0°C - 100°C
  For applications beyond the operating temperature range above, please contact local representatives.

Applications

Dryer, lighting equipment, temperature chamber

Remarks

- Be sure to read the "Cautions".
- When installing, ensure that both hinge shafts are levelled and aligned.
- Torque may decrease during and after heating. And it will restore when returning to normal temperature.

Torque Transition (in high temperature)

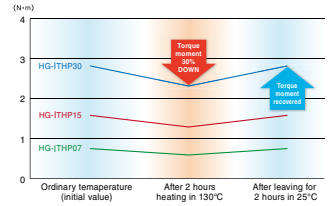

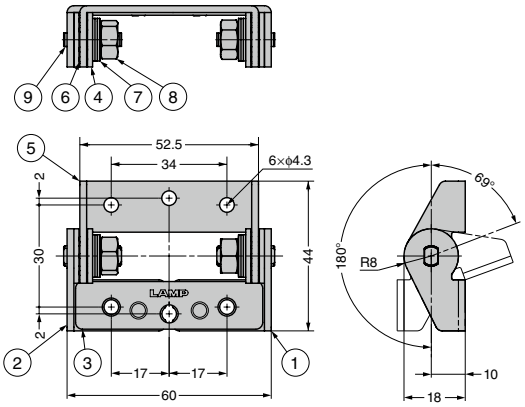

No.	Part Name	Material	Finish
①	Base L	Stainless Steel (SUS304)	–
②	Base R		
③	Connecting Bracket		
④	Thrust Plate	Carbon Steel	
⑤	Movable Bracket	Stainless Steel (SUS304)	
⑥	Ball	Steel	
⑦	Spring Washer	Stainless Steel	
⑧	Hexagon Nut	Steel (SWCH)	Zinc Chromate (Trivalent)
⑨	Shaft	Stainless Steel (SUS303)	–

CAD	Item Code	Item Name	Torque N·m/pc	Torque kgf·cm/pc	Weight (g)	Box (pcs)	Carton (pcs)
–	170-037-312	HG-ITHP07	0.7	7.1	70	25	100
–	170-037-313	HG-ITHP15	1.5	15.3	70	25	100
–	170-037-314	HG-ITHP30	3.0	30.6	72	25	100

ONE WAY TORQUE HINGE

HG-TQW8080

Features

- A torque hinge that generates torque in one direction only. It does not generate torque in the reverse direction, enabling smooth operation of the door, etc.
- Torque does not occur in the lifting direction at any point in the open/closed angle range (180°).

Specifications

Operating temperature: 0°C - 40°C

Application

Doors that should not be subjected to impact when opening and closing.
Medical equipment, FA equipment, OA equipment, etc.

Remarks

- Use all installation holes.
- Keep the centre of the hinge shafts level to prevent misalignment during installation.

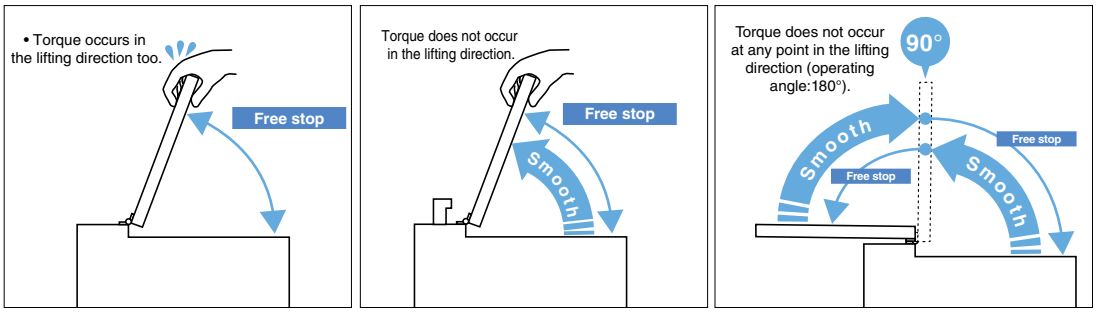

Torque hinge | One-way torque hinge | Uniaxial bidirectional one way torque hinge

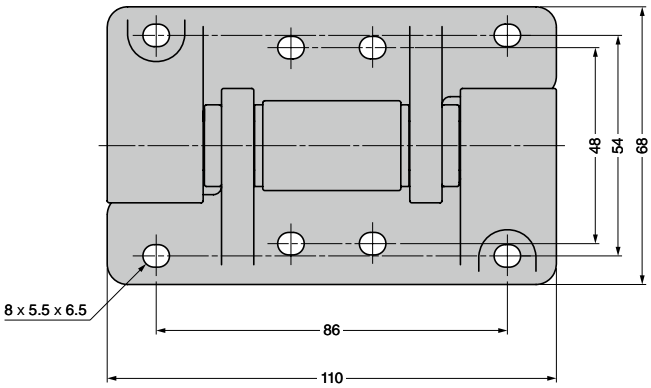

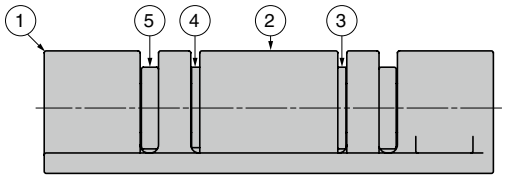

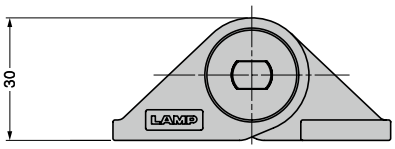

No.	Part Name	Material	Finish/Colour
①	Bracket A	Zinc Alloy	Satin Chrome
②	Bracket B		
③	Plug	Polyacetal (POM)	Black
④	Washer		
⑤	Washer		

Selection Tool
Sasuga-kun
Applicable Products
Used for Product Selection & Simulation. Available on Web!

CAD	Item Code	Item Name	Torque (N· m)	Torque (kgf· cm)	Weight (g)	Box (pcs)	Carton (pcs)
2D 3D	170-041-284	HG-TQW8080	8.0±20%	81.6±20%	625	1	15

LAMP®

DUAL AXIS TORQUE HINGE

HG-TMH

Features

- A torque hinge that can be opened 180°.
- Shafts do not protrude when the hinge is fully open or closed.
- Easy to operate as the two shafts have different torque and move one at a time.

Application

Ideal for folding tables in shops, trains, caravans, etc.

Remarks

- Keep the centre of the hinge shafts level to prevent misalignment during installation.
- Use hard wood or a similarly strong material, and make sure to tighten the fastening screws firmly. Otherwise, the hinge may come off.

Recommended Screw

- M4 countersunk screws (for sheet metal)
- Size 4 cross-recessed countersunk tapping screws (for wood)

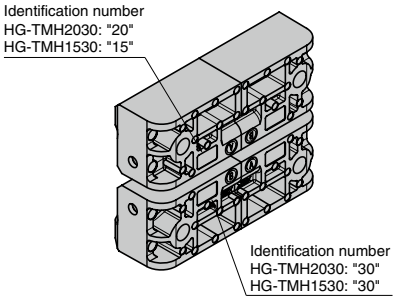

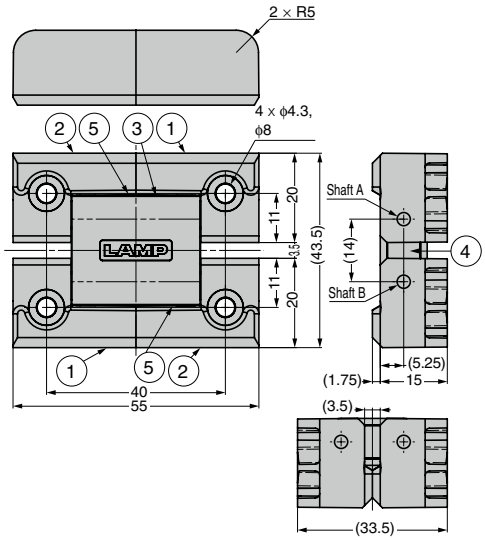

Hinge Movement

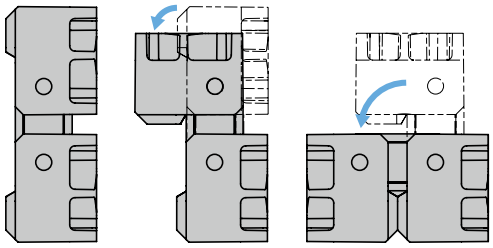

Application Example

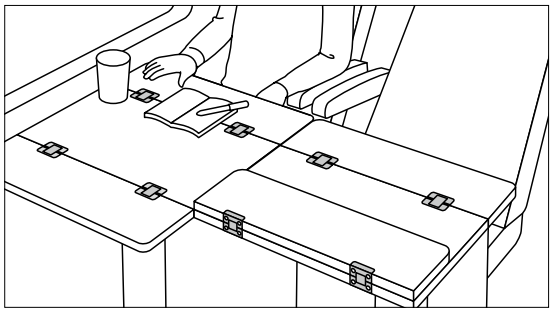

Tables for square seating on trains

Table Movement

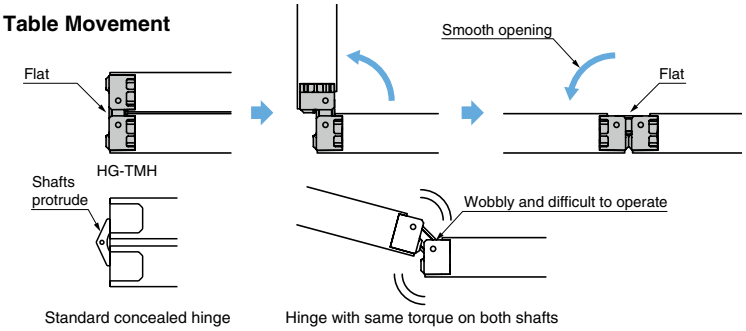

No.	Part Name	Material	Finish/Colour
①	Main BodyA	Zinc Alloy (ZDC)	Chrome
②	Main BodyB		
③	Intermediate Body		
④	Sleeve	PBT	Black
⑤	Bumper		

CAD	Item Code	Item Name	Shaft A		Shaft B		Weight (g)	Box (pcs)	Carton (pcs)
			Torque (N· m)	Torque (kgf· cm)	Torque (N· m)	Torque (kgf· cm)			
2D 3D	170-034-908	HG-TMH2030	2.0±20%	20.4±20%	3.0±20%	30.6±20%	157	10	50
2D 3D	170-034-907	HG-TMH1530	1.5±20%	15.3±20%				10	50

SUGATSUNE

TORQUE HINGE (CONCEALED)

SUS **HG-TUWA**

Features

- High torque and wide opening angle (130°) type of HG-TU.
- Installation on the back side of the door for clean appearance.
- Can be used horizontally or vertically.

Remarks

- High torque and wide opening angle (130°) type of HG-TU.
- Installation on the inner side of the door for a clean appearance.
- Can be used horizontally or vertically.
- When installing, ensure that both hinge shafts are aligned.

Selection Tool Sasuga-kun Applicable Products
Used for Product Selection & Simulation.
Available on Web!

Application Example

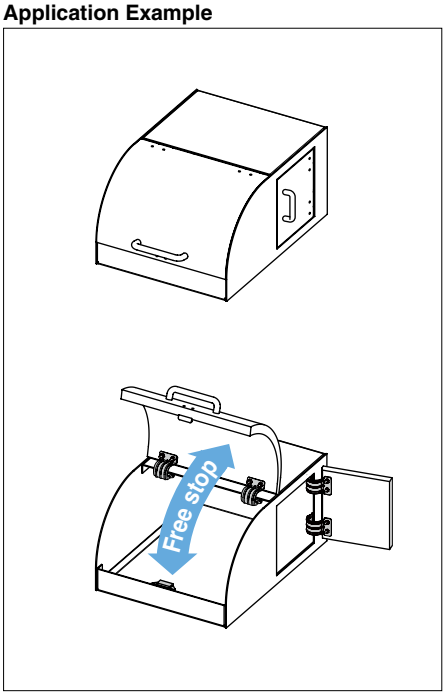

Installation

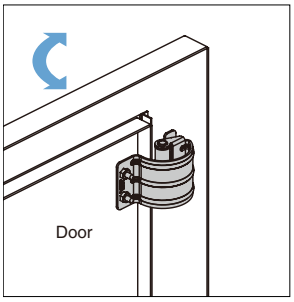

Dimensions

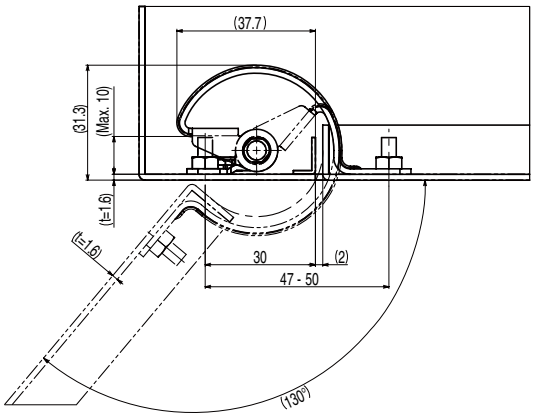

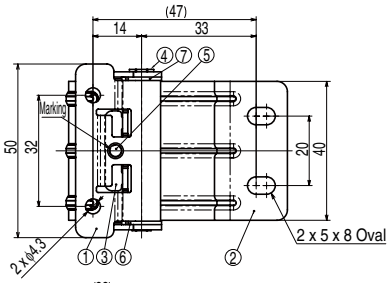

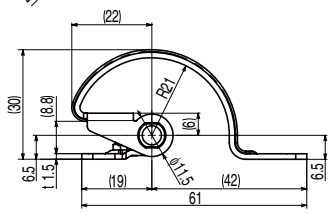

No.	Part Name	Material	Finish/Colour
①	Body	Stainless Steel (SUS304)	Barrel Polished
②	Base		
③	Press Washer		
④	Shaft	Stainless Steel (SUS303)	–
⑤	Pin	Stainless Steel	
⑥	Fixing Tube L	POM	Black
⑦	Fixing Tube R		

CAD	Item Code	Item Name	Torque N·m/pc	Torque kgf·cm/pc	Weight (g)	Box (pcs)	Carton (pcs)
2D 3D	170-034-313	HG-TUWA07	0.7 +40% −20%	7.1 +40% −20%	88	20	100
2D 3D	170-034-314	HG-TUWA15	1.5 +40% −20%	15.3 +40% −20%		20	100

LAMP®

RATCHET HINGE WITH FRICTION

HG-RCT12-C

Features

- Ratchet mechanism holds at angles in 5° increment from closed to opened position.
- Lift up to the fully open position to release the ratchet mechanism.
- The friction (resistance) function works even when released for safe operation.

Applications

For angle adjustment of folding table, touch panel, keyboard, etc.

Remarks

- Ratchet mechanism holds at angles in 5° increments from closed to the 90° position.
- Lift up to the fully open position to release the ratchet mechanism.
- The friction (resistance) function works even when the ratchet mechanism is released, for safe operation.

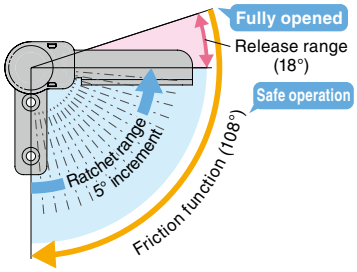

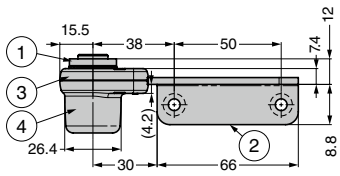

Application Example

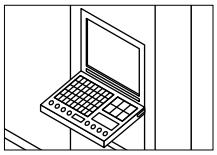

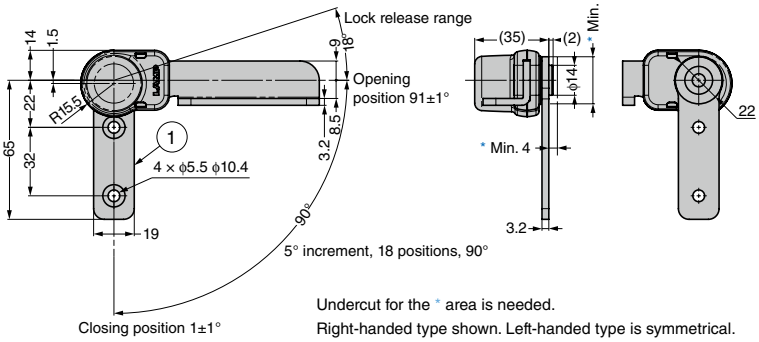

Lock Release

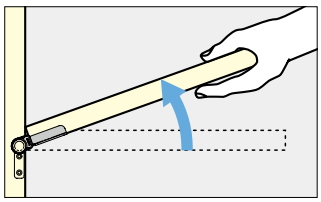

Undercut for the * area is needed.
Right-handed type shown. Left-handed type is symmetrical.

No.	Part Name	Material	Finish
①	Bracket	Steel (SPCC)	Nickel
②	Arm (Right-handed)		
③	Cover (Right-handed)	PC	–
④	Cover (Right-handed)		

CAD	Item Code	Item Name	Allowable Moment N·m/pair	Allowable Moment kgf·cm/pair	Weight (g)	Box (pairs)	Carton (pairs)
2D 3D	170-036-333	HG-RCT12-C	40	408	350	8	32

HEAVY-DUTY STAINLESS STEEL BUTT HINGE SUS HG-LSH

HG-LSH-204R

Features
- Made from 6 mm thick stainless steel.
- Made with special rings (oiled bearings) for smooth movement.
- Outstanding design with head cap.

Application
Rotating mechanisms for large doors, gates and other heavy objects.

Remarks
The load capacity is the value when two hinges are used. See the selection guide for details on calculation conditions.

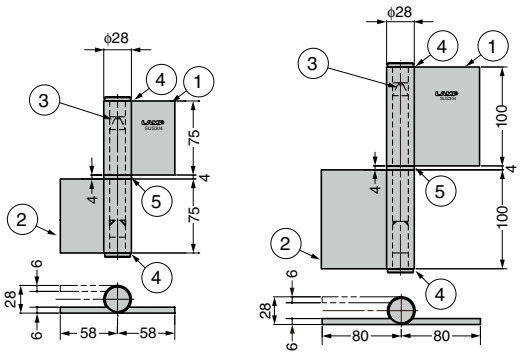

LSH-154R LSH-204R

No.	Part Name	Material	Finish
①	Door Side Hinge Plate	Stainless Steel (SUS304)	Satin
②	Frame Side Hinge Plate		
③	Pin		Plain
④	Head Cap		
⑤	Ring		

*The opening/closing test count indicates the following status.
3 hinges placed vertically, door size W900 x H2000
HG-LSH-154: Door weight 250 kg
HG-LSH-204: Door weight 280 kg

CAD	Item Code	Item Name	Type	Load Capacity N/2 pcs	Load Capacity kgf/2 pcs	Weight (g)	Box (pcs)	Carton (pcs)
2D 3D	170-034-219	HG-LSH-154L	Left Side	1961	200	1020	6	12
2D 3D	170-034-220	HG-LSH-154R	Right Side				6	12
2D 3D	170-034-221	HG-LSH-204L	Left Side	2177	222	1540	–	6
2D 3D	170-034-222	HG-LSH-204R	Right Side				–	6

HEAVY-DUTY STAINLESS STEEL BUTT HINGE (INSTALLATION HOLE TYPE) SUS HG-LSW

HG-LSW-154R

Features
- Made from 6 mm thick stainless steel.
- Made with special rings (oiled bearings) for smooth movement.
- Outstanding design with head cap.

Application
Rotating mechanisms for large doors, gates and other heavy objects.

Remarks
The load capacity is the value when two hinges are used. See the selection guide for details on calculation conditions.

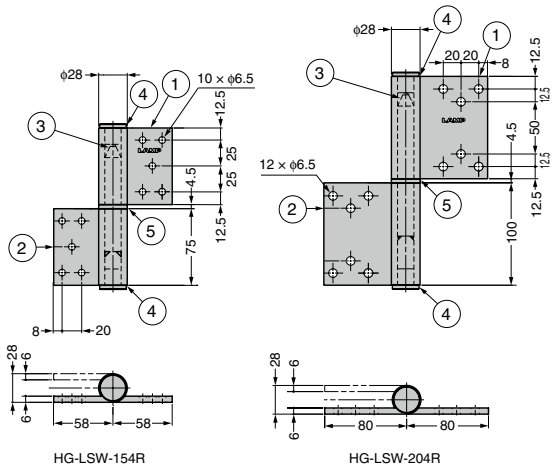

HG-LSW-154R HG-LSW-204R

No.	Part Name	Material	Finish
①	Door Side Hinge Plate	Stainless Steel (SUS304)	Satin
②	Frame Side Hinge Plate		
③	Pin		Plain
④	Head Cap		
⑤	Ring		Barrel Polished

CAD	Item Code	Item Name	Type	Load Capacity N/2 pcs	Load Capacity kgf/2 pcs	Box (pcs)	Carton (pcs)
2D 3D	170-041-019	HG-LSW-154L	Left Side	1960	200	6	12
2D 3D	170-041-020	HG-LSW-154R	Right Side			6	12
2D 3D	170-041-021	HG-LSW-204L	Left Side	2180	222	–	6
2D 3D	170-041-022	HG-LSW-204R	Right Side			–	6

HEAVY DUTY CONCEALED HINGE J95

Max. Door Weight : 25 kg with 2 pcs, 40 kg with 3 pcs.

You can reduce the time spending over construction and installation since you don't need to install as many as regular concealed hinges.
It can be used for heavy door applications such as big cabinets in houses or stores.

Normal Concealed Hinges (5 pcs used) **J95 (2 pcs used)**

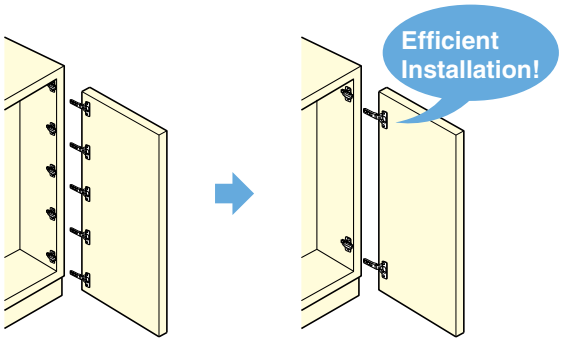

The Number of Necessary Hinges with Door Dimensions

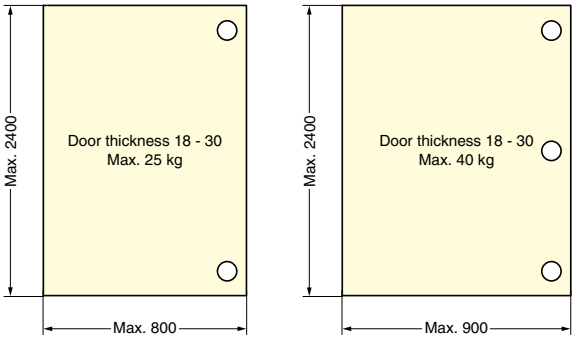

Simple Installation and Detachment by One-Touch

- **How to Install**

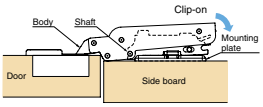

- **How to Release**

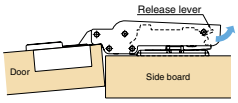

Flat Design

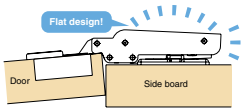

Easy and Fast Adjustment

Door can be adjusted by turning adjustment screws.

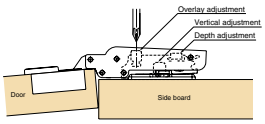

Overlay Adjustment (Horizontal Adjustment)

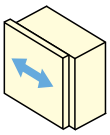

+0 mm, –4 mm

Vertical Adjustment

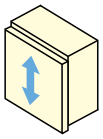

±3 mm

Depth Adjustment

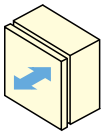

+1.5 mm, –2.5 mm

Tilting Adjustment

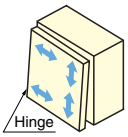

Tilting adjustment can be done by using these three ways of adjustments.

For One-Touch Sliding Hinge for Heavy Doors J95 Series TAP518

CAD	Item Code	Item Name	Material	Finish
–	160-032-356	TAP518NI	Steel	Nickel
–	160-043-496	TAP518BN		Black Nickel

MOUNTING PLATE J95-P6T

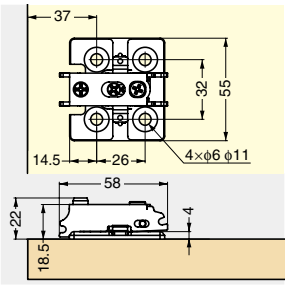

Features

- Depth adjustment : + 1.5 -2.5 mm
- Vertical adjustment : ± 3 mm
- Overlay distance adjustment : + 0, - 4 mm
- Thickness: 0 mm (Standard)

Recommended Screw

Size 5 raised countersunk head tapping screw or wood screw.

Item Code	Item Name	Material	Finish	Weight	Carton
160-026-732	J95-P6T	Steel/Zinc Alloy (ZDC)	Nickel	94 g	100 pcs
160-034-927	J95-P6T BN		Black Nickel	94 g	100 pcs

95°Opening | **25 mm Overlay** | **Overlay 21 - 25 mm (When Bore Distance is 8 mm)** | **Cup Dia Φ 40 Bore Depth 15 mm Door Thickness 18 - 30 mm** | **Mounting Plate J95-P6T (P.368)**

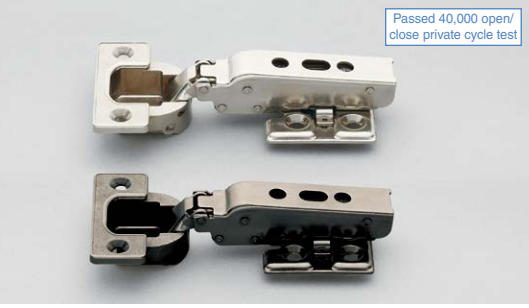

Picture above is the combination of concealed hinge and mounting plate.

CONCEALED HINGE J95

Item Code	Item Name	Type	Material	Finish	Weight	Carton
160-026-905	J95-24/25T	w/o Catch	Body/Steel, Cup/Zinc Alloy (ZDC)	Nickel	131 g	100 pcs
160-026-731	J95-C24/25T	w/ Catch			143 g	100 pcs
160-034-919	J95-24/25T BN	w/o Catch		Black Nickel	134 g	100 pcs
160-034-916	J95-C24/25T BN	w/ Catch			146 g	100 pcs

Features

- 3-way-adjustment function by mounting plate (depth + 1.5, - 2.5 mm, vertical ± 3 mm, overlay [horizontal] + 0, - 4 mm).
- Snap on mount.

Sold Separately

- Mounting plate (P.368)
- Face plate for glass door (P.373)
- Safety cover (P.373)
- Cover for mounting plate (P.373)

- **Outline drawing**

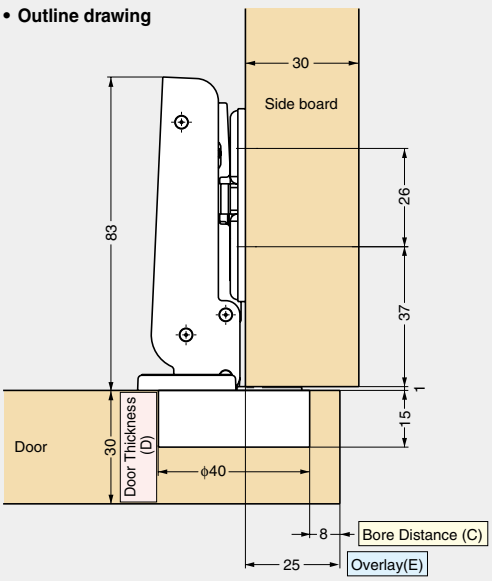

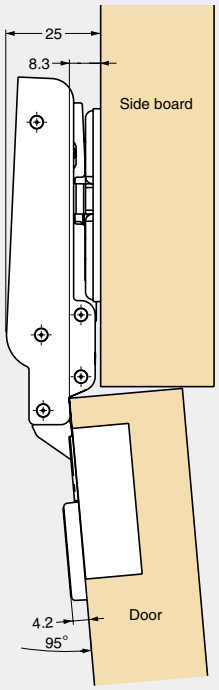

Drawing above is J95-C24/25T, J95-24/25T snapped on to mounting plate J95-P6T: Bore Distance 8 mm, Door Thickness 30 mm and 25 mm Overlay.

- **Locus chart**

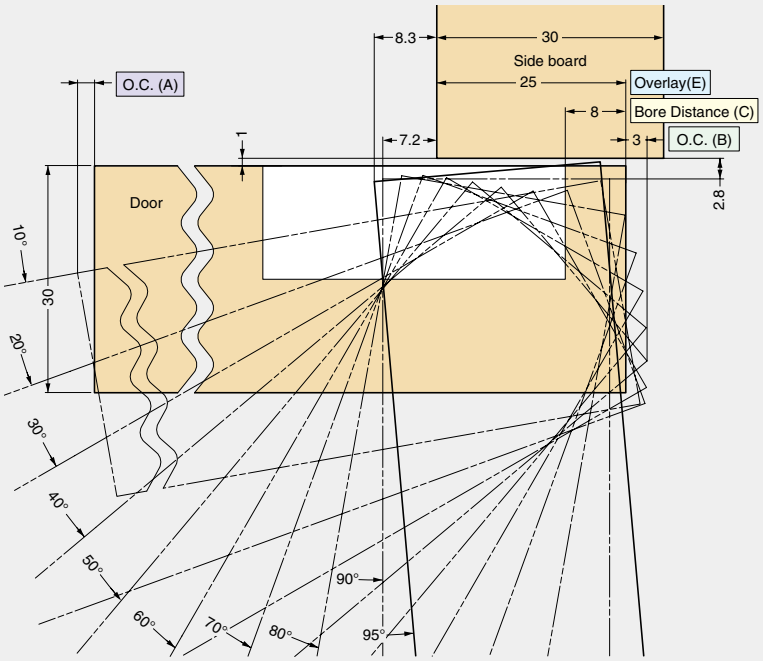

Drawing above is Bore Distance 8 mm, Door Thickness 30 mm, Side Board Thickness 30 mm and 25 mm Overlay.

Bore Distance (C)

Bore Distance (C)	3	4	5	6	7	8
Overlay (E)	20	21	22	23	24	25

Overlay adjustment (- 4 mm) by turning the overlay adjustment screw.

Opening Clearance (O.C.)

Clearances for door edge O.C. (A) and hinge side O.C. (B) are necessary. O.C. (A) and (B) change depending on door thickness and bore distance (C). Refer to locus chart and tables below when designing cabinets.

O.C. (B)

Door Thickness (D)	Bore Distance (C)					
	3	4	5	6	7	8
18	0.3	0.3	0.3	0.3	0.3	0.3
20	0.5	0.5	0.5	0.5	0.5	0.5
22	0.8	0.8	0.8	0.7	0.7	0.7
24	1.1	1.1	1.1	1.1	1.1	1.0
26	1.7	1.6	1.6	1.5	1.5	1.5
28	3.2	2.8	2.5	2.2	2.1	2.0
30	5.0	4.5	4.0	3.6	3.3	3.0
32	6.8	6.2	5.7	5.2	4.8	4.4
34	8.6	8.0	7.5	6.9	6.5	6.0
	O.C. (B)					

Please refer to the locus chart if door thickness is over 30 mm.

O.C. (A)

Door Thickness (D)	Door Width						
	300	400	500	600	700	800	900
30	0.50	0.30	0.30	0.20	0.20	0.20	0.20
	O.C. (A)						

Cut Out Dimensions

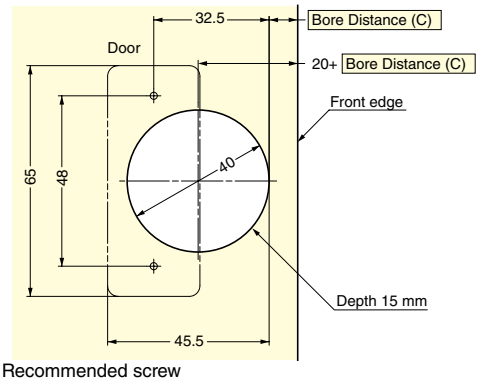

- Recommended screw
  Size 5 raised countersunk head tapping screw or wood screw.

Door Dimensions and Number of Hinges

Please refer to P.368.

95°Opening | **16 mm Overlay** | **Overlay 12 - 16 mm (When Bore Distance is 8 mm)** | **Cup Dia Φ 40 Bore Depth 15 mm Door Thickness 18 - 30 mm** | **Mounting Plate J95-P6T (P.368)**

Picture above is the combination of concealed hinge and mounting plate.

CONCEALED HINGE J95

Item Code	Item Name	Type	Material	Finish	Weight	Carton
160-033-658	J95-24/16T	w/o Catch	Body/Steel, Cup/Zinc Alloy (ZDC)	Nickel	131 g	50 pcs
160-033-657	J95-C24/16T	w/ Catch			143 g	50 pcs
160-034-920	J95-24/16T BN	w/o Catch		Black	143 g	50 pcs
160-034-917	J95-C24/16T BN	w/ Catch		Nickel	155 g	50 pcs

Features

- 3-way-adjustment function by mounting plate (depth + 1.5, - 2.5 mm, vertical ± 3 mm, overlay [horizontal] + 0, - 4 mm).
- Snap on mount.

Sold Separately

- Mounting plate (P.368)
- Face plate for glass door (P.373)
- Safety cover (P.373)
- Cover for mounting plate (P.373)

- **Outline drawing**

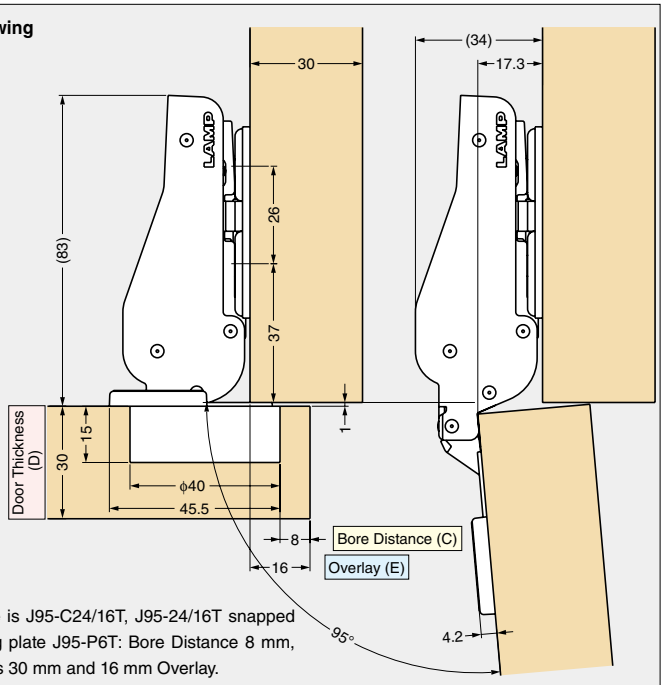

Drawing above is J95-C24/16T, J95-24/16T snapped on to mounting plate J95-P6T: Bore Distance 8 mm, Door Thickness 30 mm and 16 mm Overlay.

- **Locus chart**

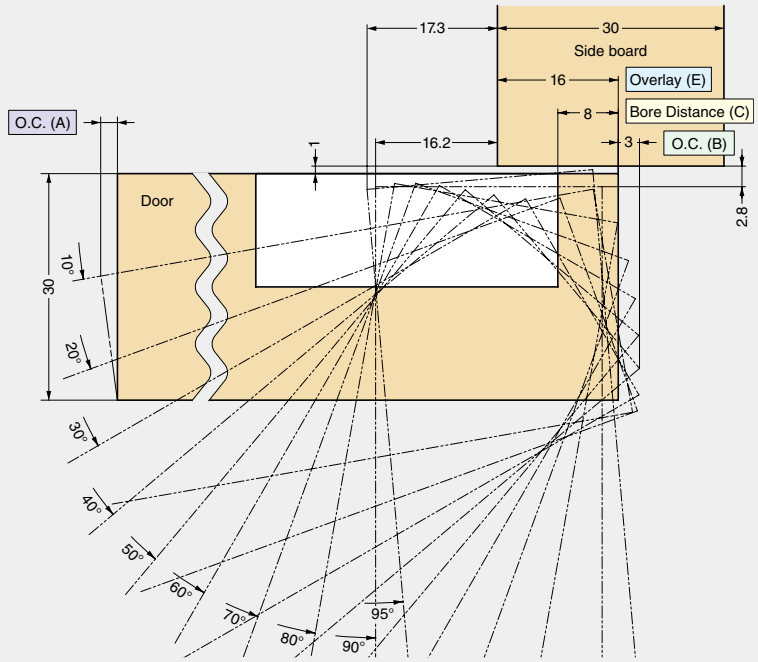

Drawing above is Bore Distance 8 mm, Door Thickness 30 mm, Side Board Thickness 30 mm and 16 mm Overlay.

Bore Distance (C)

Bore Distance (C)	3	4	5	6	7	8
Overlay (E)	11	12	13	14	15	16

Overlay adjustment (Max. -4 mm) by turning the overlay adjustment screw.

Opening Clearance (O.C.)

Clearances for door edge O.C. (A) and hinge side O.C. (B) are necessary. O.C. (A) and (B) change depending on door thickness and bore distance (C). Refer to locus chart and tables below when designing cabinets.

O.C. (B)

Door Thickness (D)	Bore Distance (C)					
	3	4	5	6	7	8
18	0.3	0.3	0.3	0.3	0.3	0.3
20	0.5	0.5	0.5	0.5	0.5	0.5
22	0.8	0.8	0.8	0.7	0.7	0.7
24	1.1	1.1	1.1	1.1	1.1	1.0
26	1.7	1.6	1.6	1.5	1.5	1.5
28	3.2	2.8	2.5	2.2	2.1	2.0
30	5.0	4.5	4.0	3.6	3.3	3.0
32	6.8	6.2	5.7	5.2	4.8	4.4
34	8.6	8.0	7.5	6.9	6.5	6.0
	O.C. (B)					

Please refer to the locus chart if door thickness is over 30 mm.

O.C. (A)

Door Thickness (D)	Door Width						
	300	400	500	600	700	800	900
20	0.50	0.30	0.30	0.20	0.20	0.20	0.20
	O.C. (A)						

Cut Out Dimensions

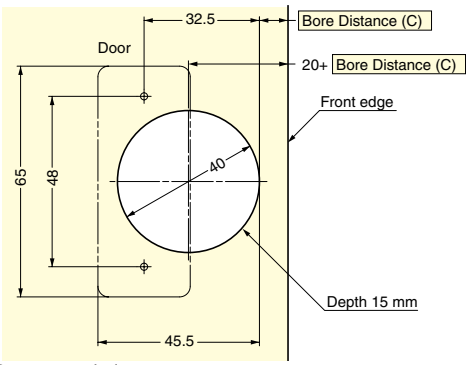

- Recommended screw
  Size 5 raised countersunk head tapping screw or wood screw.

Door Dimensions and Number of Hinges

Please refer to P.368.

93°Opening	Inset	Overlay -4 - 0 mm (When Bore Edge Distance is 8 mm)	Cup Dia Φ 40 Bore Depth 15 mm Door Thickness 18 - 30 mm	Mounting Plate J95-P6T (P.368)

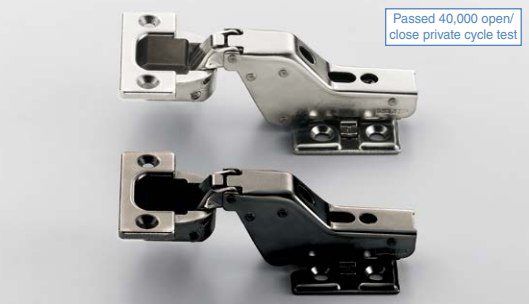

Picture above is the combination of concealed hinge and mounting plate.

CONCEALED HINGE J95

Item Code	Item Name	Type	Material	Finish	Weight	Carton
160-033-660	J95-24/0T	w/o Catch	Body/Steel, Cup/Zinc Alloy (ZDC)	Nickel	148 g	50 pcs
160-033-659	J95-C24/0T	w/ Catch			160 g	50 pcs
160-034-921	J95-24/0T BN	w/o Catch		Black	148 g	50 pcs
160-034-918	J95-C24/0T BN	w/ Catch		Nickel	160 g	50 pcs

Features

- 3-way-adjustment function by mounting plate (depth + 1.5, - 2.5 mm, vertical ± 3 mm, overlay [horizontal] + 0, - 4 mm).
- Snap on mount.

Sold Separately

- Mounting Plate (P.368)
- Face plate for glass door (P.373)
- Safety cover (P.373)
- Cover for mounting plate (P.373)

• **Outline drawing**

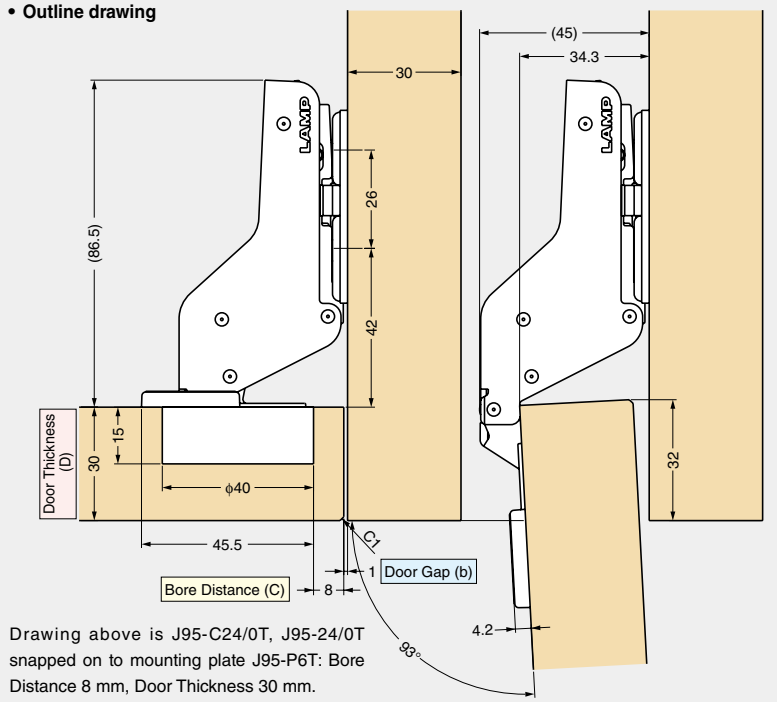

Drawing above is J95-C24/0T, J95-24/0T snapped on to mounting plate J95-P6T: Bore Distance 8 mm, Door Thickness 30 mm.

• **Locus chart**

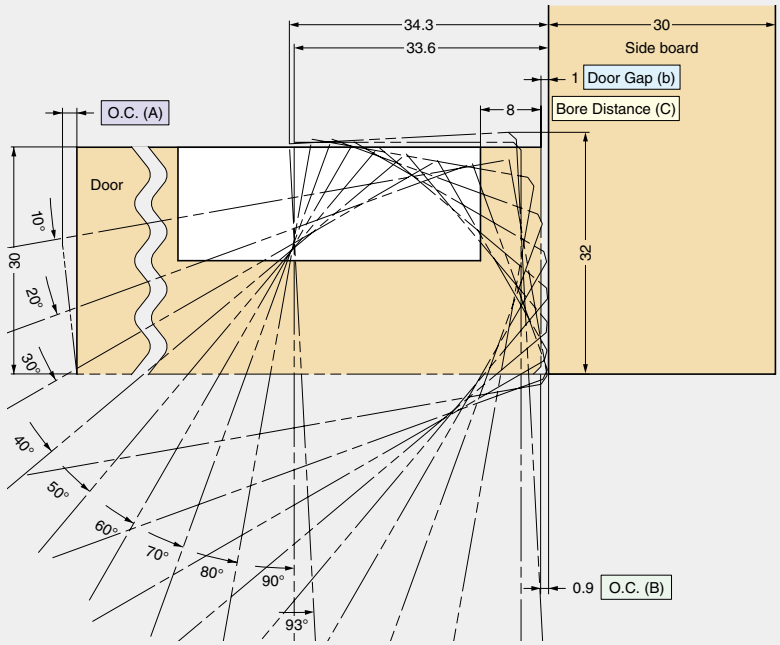

Drawing above is J95-C24/0T Bore Distance 8 mm, Door Thickness 30 mm, Side Board Thickness 30 mm.

Bore Distance (C)

Bore Distance (C)	3	4	5	6	7	8
Door Gap (b)	6	5	4	3	2	1

Overlay adjustment (Max. -4 mm) by turning the overlay adjustment screw.

Opening Clearance (O.C.)

Clearances for door edge O.C. (A) and hinge side O.C. (B) are necessary. O.C. (A) and (B) change depending on door thickness and bore distance (C). Refer to locus chart and tables below when designing cabinets.

O.C. (B)

Door Thickness (D)	Bore Distance (C)					
	3	4	5	6	7	8
18	0	0	0	0	0	0
20	0	0	0	0	0	0
22	0.1	0.1	0.1	0.1	0	0.1
24	0.1	0.1	0.1	0.1	0.1	0.1
26	0.3	0.3	0.3	0.3	0.3	0.3
28	1.7	1.1	0.6	0.5	0.5	0.5
30	3.5	2.9	2.3	1.8	1.0	0.9
32	5.4	4.7	4.1	3.6	3.0	2.5
34	7.3	6.6	6.0	5.4	4.8	4.3
	O.C. (B)					

Please refer to the locus chart if door thickness is over 30 mm.

O.C. (A)

Door Thickness (D)	Door Width						
	300	400	500	600	700	800	900
20	0.90	0.60	0.50	0.40	0.40	0.30	0.30
	O.C. (A)						

Cut Out Dimensions

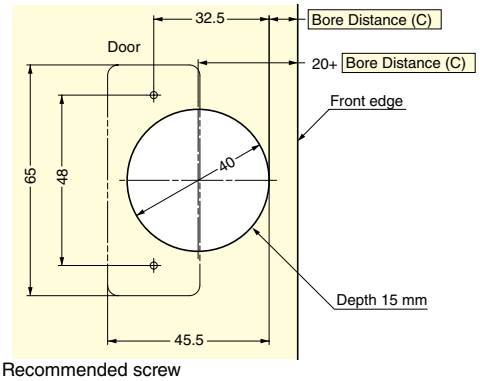

- Recommended screw
  Size 5 raised countersunk head tapping screw or wood screw.

Door Dimensions and Number of Hinges

Please refer to P.368.

FACE PLATE FOR GLASS DOOR

STEEL

GH-J95FP

GH-J95FP-CR

GH-J95FP-SN

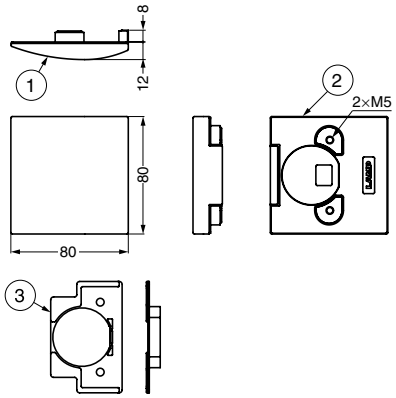

*Black Nickel will be available soon.

J95 Application

Parts Included

Countersunk head screw M5×18

Sold Separately

- Heavy duty concealed hinge J95 (P.368 - 371).
- Mounting plate J95-P6T (P.368)

No.	Part Name	Material	Finish/Colour
①	Face Plate	Zinc Alloy (ZDC)	Chrome/Satin Nickel
②	Face Plate Spacer	Polyacetal (POM)	Black
③	Socket Spacer		

Item Code	Item Name	Material	Finish	Weight	Carton
160-032-418	GH-J95FP-CR	Zinc Alloy (ZDC)	Chrome	320 g	20 pcs
160-033-893	GH-J95FP-SN		Satin Nickel		20 pcs

- **Outline drawing**

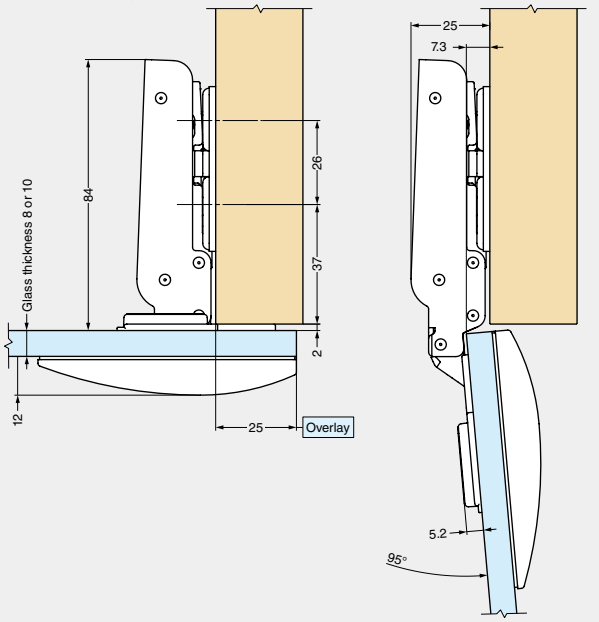

- **Locus chart**

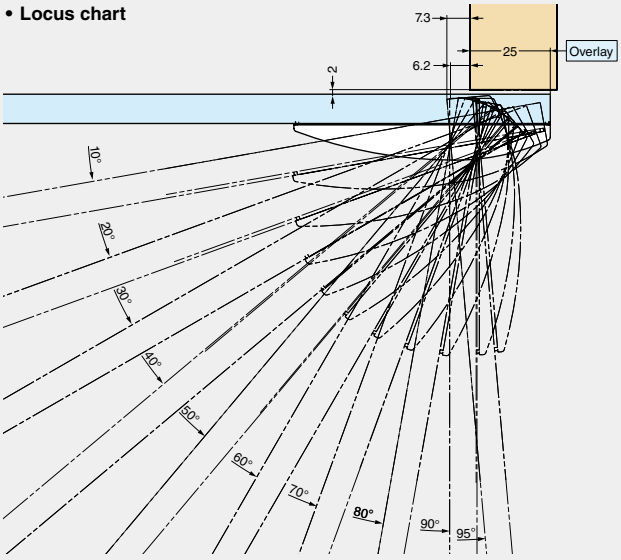

Example (glass thickness : 8 mm / side board : 27 mm / overlay : 25 mm)

Opening Clearance

Hinge side = 0 mm

Handle side = 0 mm

Cut Out Dimensions

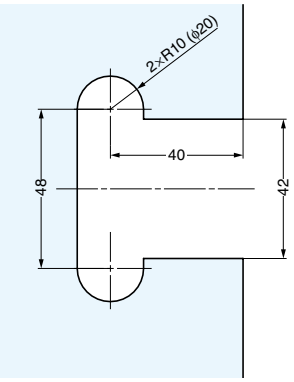

Door Dimensions and Number of Hinges

Glass thickness : 8 mm

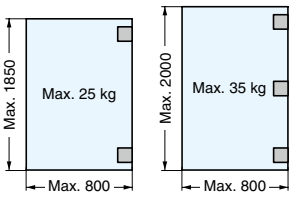

Glass thickness : 10 mm

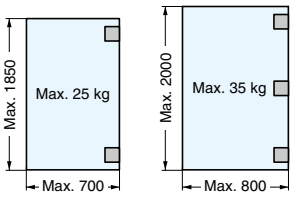

FACE PLATE FOR GLASS DOOR

GH-J95FP-Q1

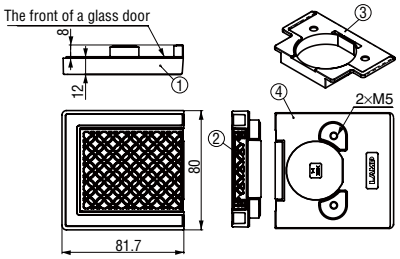

Parts Included

Countersunk head screw M5×18

Sold Separately

- Heavy duty concealed hinge J95 (P.368 - 371).
- Mounting plate J95-P6T (P.368)

No.	Part Name	Material	Finish/Colour
①	Face Plate	Zinc Alloy (ZDC)	Chrome
			24 Karat Gold Plated
			Antique Brass
			Black
②	Decorative Plate	Brass	(As Left)
③	Socket Spacer	Polyacetal (POM)	Black
④	Face Plate Spacer		

Item Code	Item Name	Finish/Colour	Weight	Carton
160-035-782	GH-J95FP-Q1-SL	Nickel	305 g	20pc
160-035-783	GH-J95FP-Q1-GL	24 Karat Gold Plated		20pc
160-035-784	GH-J95FP-Q1-BR	Antique Brass		20pc
160-035-785	GH-J95FP-Q1-BL	Black Nickel		20pc

SAFETY COVER

J95SC

J95SC-25GR

J95SC-25NI

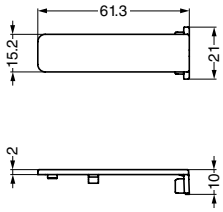

J95SC-25GR

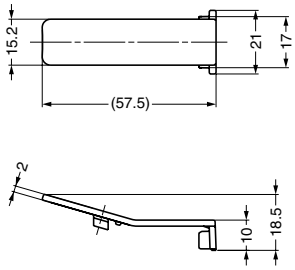

J95SC-16GR

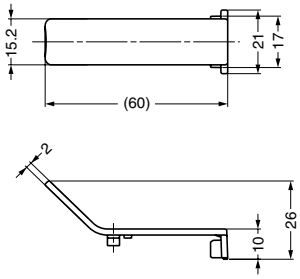

J95SC-0GR

Features

The cover locks the release lever of J95 hinge to prevent accidental release.

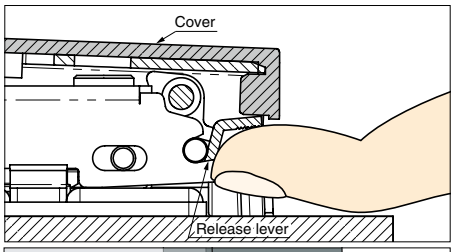

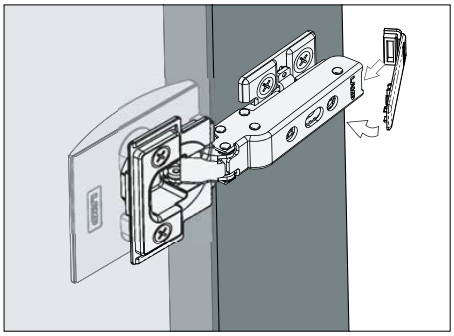

Item Code	Item Name	Use With	Material	Weight	Finish/Color	Carton
160-032-763	J95SC-25GR	J95-(C)24/25	ABS	3 g	Gray	500 pcs
160-034-673	J95SC-25NI	J95-(C)24/25	ABS	3 g	Nickel	500 pcs
160-032-764	J95SC-16GR	J95-(C)24/16	ABS	3 g	Gray	500 pcs
160-034-674	J95SC-16NI	J95-(C)24/16	ABS	3 g	Nickel	500 pcs
160-032-765	J95SC-0GR	J95-(C)24/0	ABS	3 g	Gray	500 pcs
160-034-675	J95SC-0NI	J95-(C)24/0	ABS	3 g	Nickel	500 pcs

COVER FOR MOUNTING PLATE

J95ZC

J95ZC-GR

J95ZC-NI

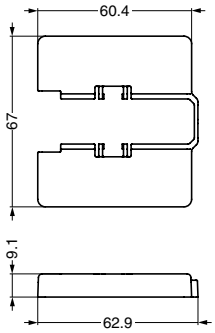

Item Code	Item Name	Use With	Material	Weight	Carton
160-032-766	J95ZC-GR	J95-P6T	ABS	9 g	500 pcs
160-034-743	J95ZC-NI	J95-P6T	ABS	9 g	500 pcs

HINGES

CONCEALED HINGE (STAINLESS STEEL)

100°Opening	19 mm Overlay	Overlay 15 - 19 mm	Cup Dia Φ 35 Bore Depth 11 mm Door Thickness 15 - 20 mm	Stainless Steel Mounting Plate 100 Series (P.377)

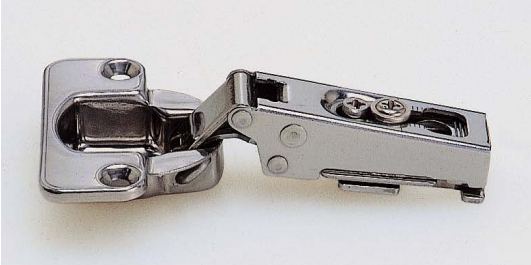

Picture above is the combination of concealed hinge and mounting plate.

CONCEALED HINGE (STAINLESS STEEL) STAINLESS 304 STEEL 100

Item Code	Item Name	Type	Material	Finish	Weight	Carton
160-073-865	100-46/19 SUS304B	w/o Catch	Stainless Steel (SUS304)	Polished	39 g	200 pcs
160-073-870	100-C46/19 SUS304B	w/ Catch	Stainless Steel (SUS304)	Polished	44 g	200 pcs

Features

Screw mount.

Sold Separately

Stainless steel 100 series mounting plate (P.377)

• **Outline drawing S≈1/2**

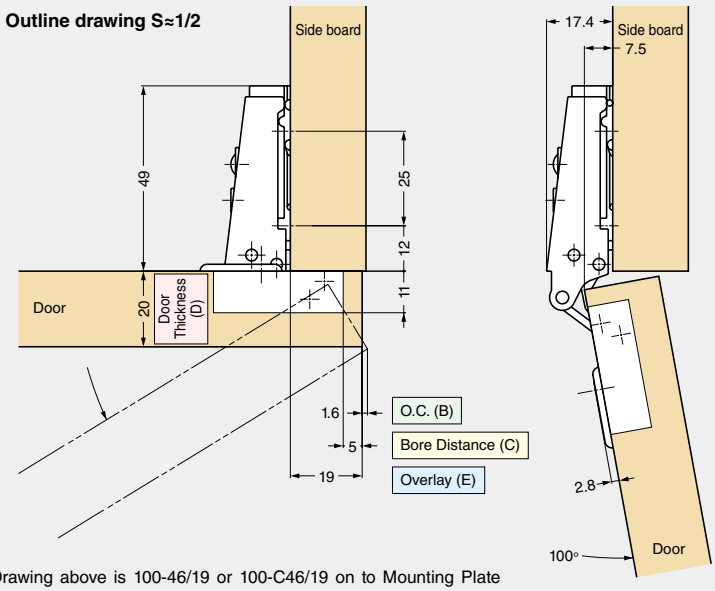

Drawing above is 100-46/19 or 100-C46/19 on to Mounting Plate 100-P3A: Bore Distance 5 mm, Door Thickness 20 mm and 19 mm Overlay.

• **Locus chart S≈1/1**

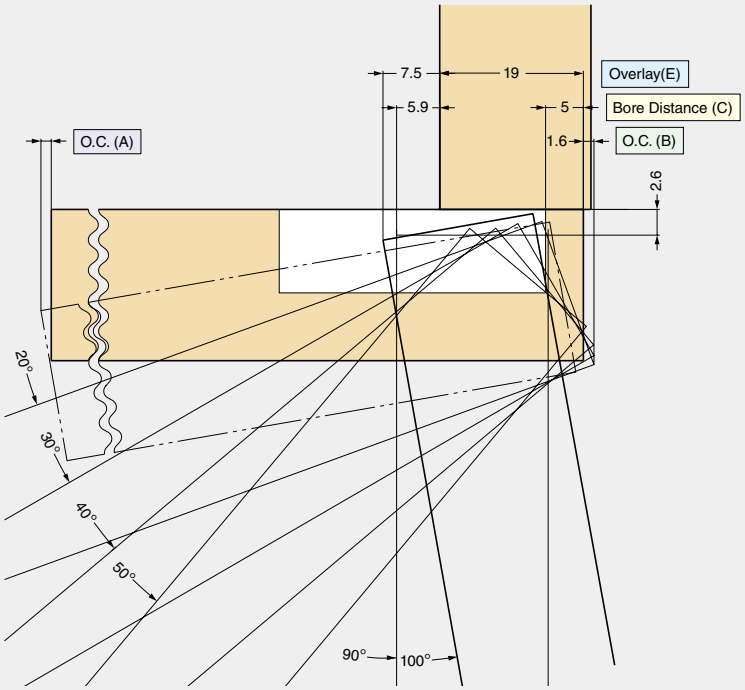

Drawing above is Bore Distance 5 mm, Door Thickness 20 mm, Side Board Thickness 20 mm and 19 mm Overlay.

Bore Distance (C)

Bore Distance (C)	3	4	5
Overlay (E)	17	18	19

For standard type mounting plate 0 mm thickness.
Turning the overlay adjustment screw or using distance plate (2 mm thickness) to adjust overlay (Max. - 6 mm).

Opening Clearance (O.C.)

Clearances for door edge O.C. (A) and hinge side O.C. (B) are necessary. O.C. (A) and (B) change depending on door thickness and bore distance (C). Refer to locus chart and tables below when designing cabinets.

O.C. (B)

Door Thickness (D)	Bore Distance (C) 3	4	5
15	0.5	0.5	0.4
16	0.6	0.6	0.6
17	0.9	0.8	0.8
18	1.1	1.1	1.0
19	1.4	1.3	1.3
20	1.7	1.6	1.6
21	2.1	2.0	1.9
22	2.5	2.4	2.3
	O.C. (B)		

Please refer to the locus chart if door thickness is over 20 mm.

O.C. (A)

Door Thickness (D)	Door Width 300	400	500	600
20	0.2	0.1	0.1	0.1
	O.C. (A)			

Cut Out Dimensions

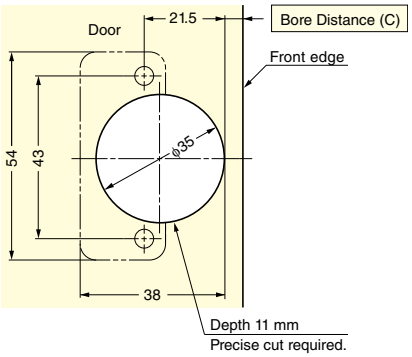

• Recommended screw
Size 3.5 raised countersunk head tapping screw or wood screw.

Door Dimensions and Number of Hinges

Please refer to P.394.

100°Opening | **14 mm Overlay** | Overlay 10 - 14 mm | Cup Dia Φ 35 Bore Depth 11 mm Door Thickness 15 - 20 mm | Stainless Steel Mounting Plate 100 Series (P.377)

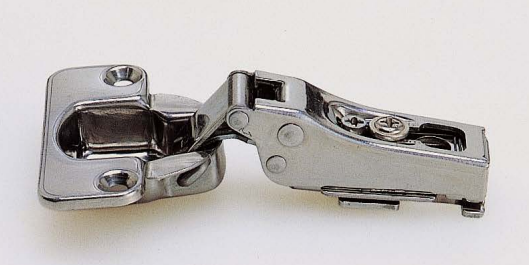

Picture above is the combination of concealed hinge and mounting plate.

CONCEALED HINGE (STAINLESS STEEL) STAINLESS 304 STEEL 100

Item Code	Item Name	Type	Material	Finish	Weight	Carton
160-073-875	100-46/14 SUS304B	w/o Catch	Stainless Steel (SUS304)	Polished	41 g	200 pcs
160-073-880	100-C46/14 SUS304B	w/ Catch	Stainless Steel (SUS304)	Polished	45 g	200 pcs

Features

Screw mount.

Sold Separately

Stainless steel 100 series mounting plate (P.377)

• **Outline drawing S≈1/2**

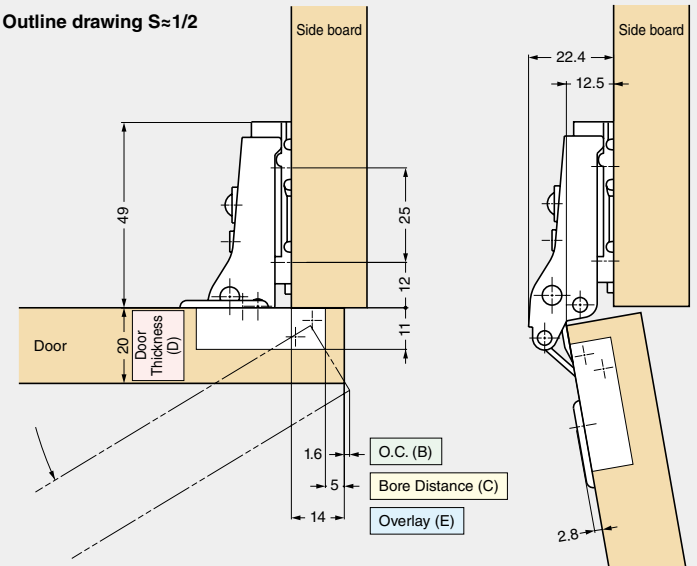

Drawing above is 100-46/14 or 100-C46/14 on to Mounting Plate 100-P3A: Bore Distance 5 mm, Door Thickness 20 mm and 14 mm Overlay.

• **Locus chart S≈1/1**

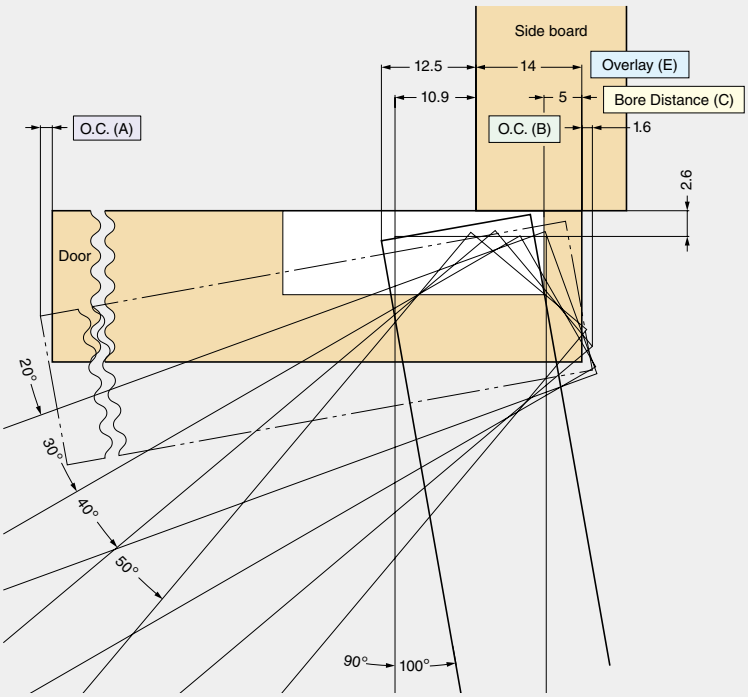

Drawing above is Bore Distance 5 mm, Door Thickness 20 mm, Side Board Thickness 20 mm and 14 mm Overlay.

Bore Distance (C)

Bore Distance (C)	3	4	5
Overlay (E)	12	13	14

For standard type mounting plate 0 mm thickness.
Turning the overlay adjustment screw or using distance plate (2 mm thickness) to adjust overlay (Max. - 6 mm).

Opening Clearance (O.C.)

Clearances for door edge O.C. (A) and hinge side O.C. (B) are necessary. O.C. (A) and (B) change depending on door thickness and bore distance (C). Refer to locus chart and tables below when designing cabinets.

O.C. (B)

Door Thickness (D)	Bore Distance (C)		
	3	4	5
15	0.5	0.5	0.4
16	0.6	0.6	0.6
17	0.9	0.8	0.8
18	1.1	1.1	1.0
19	1.4	1.3	1.3
20	1.7	1.6	1.6
21	2.1	2.0	1.9
22	2.5	2.4	2.3
	O.C. (B)		

Please refer to the locus chart if door thickness is over 20 mm.

O.C. (A)

Door Thickness (D)	Door Width			
	300	400	500	600
20	0.2	0.1	0.1	0.1
	O.C. (A)			

Cut Out Dimensions

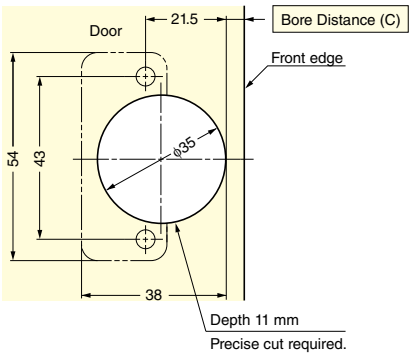

• Recommended screw
Size 3.5 raised countersunk head tapping screw or wood screw.

Door Dimensions and Number of Hinges

Please refer to P.394.

HINGES

CONCEALED HINGE (STAINLESS STEEL)

100°Opening	9 mm Overlay	Overlay 5 - 9 mm	Cup Dia Φ 35 Bore Depth 11 mm Door Thickness 15 - 20 mm	Stainless Steel Mounting Plate 100 Series (P.377)

Picture above is the combination of concealed hinge and mounting plate.

CONCEALED HINGE (STAINLESS STEEL) STAINLESS 304 STEEL 100

Item Code	Item Name	Type	Material	Finish	Weight	Carton
160-073-883	100-46/9 SUS304B	w/o Catch	Stainless Steel (SUS304)	Polished	42 g	200 pcs
160-073-884	100-C46/9 SUS304B	w/ Catch	Stainless Steel (SUS304)	Polished	46 g	200 pcs

Features

Screw mount.

Sold Separately

Stainless steel 100 series mounting plate (P.377)

• **Outline drawing S≈1/2**

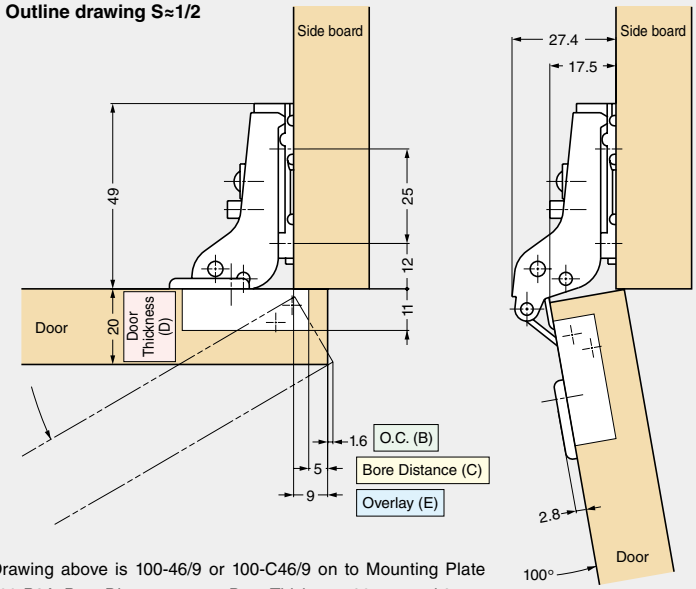

Drawing above is 100-46/9 or 100-C46/9 on to Mounting Plate 100-P3A: Bore Distance 5 mm, Door Thickness 20 mm and 9 mm Overlay.

• **Locus chart S≈1/1**

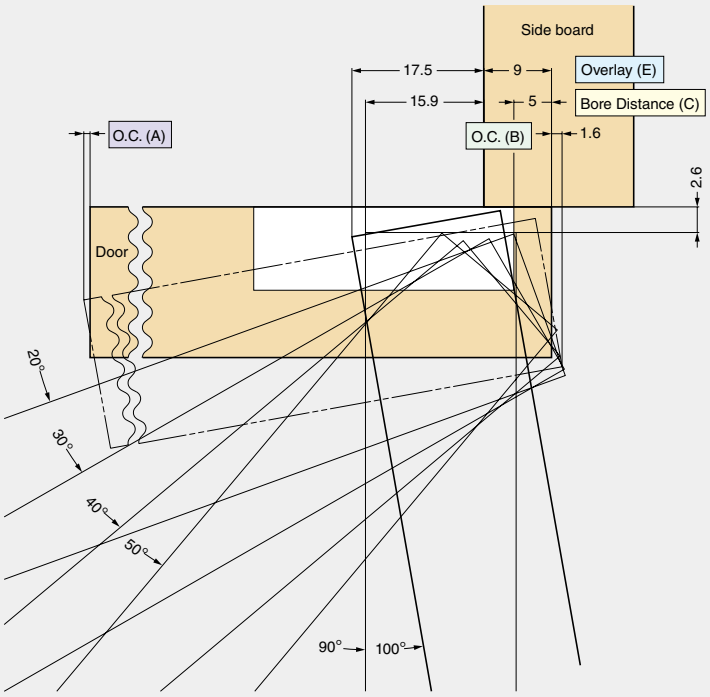

Drawing above is Bore Distance 5 mm, Door Thickness 20 mm, Side Board Thickness 20 mm and 9 mm Overlay.

Bore Distance (C)

Bore Distance (C)	3	4	5
Overlay (E)	7	8	9

For standard type mounting plate 0 mm thickness.
Turning the overlay adjustment screw or using distance plate (2 mm thickness) to adjust overlay (Max. - 6 mm).

Opening Clearance (O.C.)

Clearances for door edge O.C. (A) and hinge side O.C. (B) are necessary. O.C. (A) and (B) change depending on door thickness and bore distance (C). Refer to locus tables and charts below when designing cabinets.

O.C. (B)

Door Thickness (D)	Bore Distance (C)		
	3	4	5
15	0.5	0.5	0.4
16	0.6	0.6	0.6
17	0.9	0.8	0.8
18	1.1	1.1	1.0
19	1.4	1.3	1.3
20	1.7	1.6	1.6
21	2.1	2.0	1.9
22	2.5	2.4	2.3
	O.C. (B)		

Please refer to the locus chart if door thickness is over 20 mm.

O.C. (A)

Door Thickness (D)	Door Width			
	300	400	500	600
20	0.2	0.1	0.1	0.1
	O.C. (A)			

Cut Out Dimensions

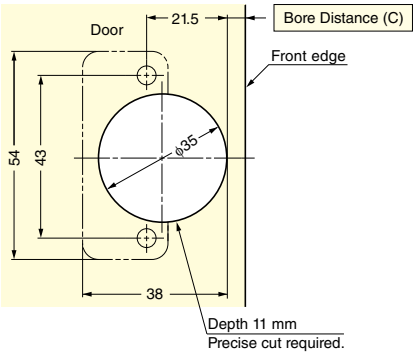

• Recommended screw
Size 3.5 raised countersunk head tapping screw or wood screw.

Door Dimensions and Number of Hinges

Please refer to P.394.

STAINLESS STEEL MOUNTING PLATE 100 SERIES

STANDARD TYPE

STAINLESS 304 STEEL

100-P3A-SUS304B

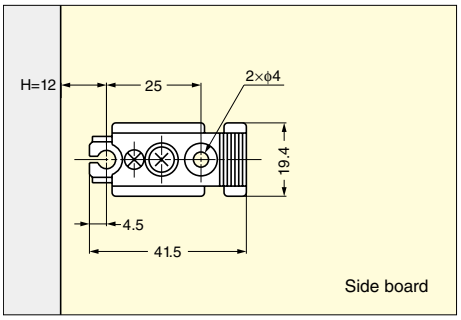

Standard height: 0 mm

Item Code	Item Name	Material	Finish	Weight	Carton
160-074-155	100-P3A-SUS304B	Stainless Steel (SUS304)	Polished	22 g	400 pcs

SYSTEM 35, 30 TYPE

STAINLESS 304 STEEL

100-P4A-30-SUS304B

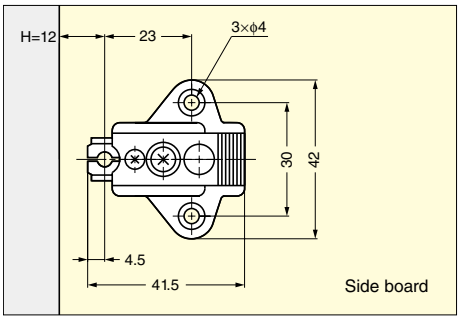

Standard height: 0 mm

Item Code	Item Name	Material	Finish	Weight	Carton
160-074-152	100-P4A-30-SUS304B	Stainless Steel (SUS304)	Polished	26 g	400 pcs

SYSTEM 37, 32 TYPE

STAINLESS 304 STEEL

100-P4A-32-SUS304B

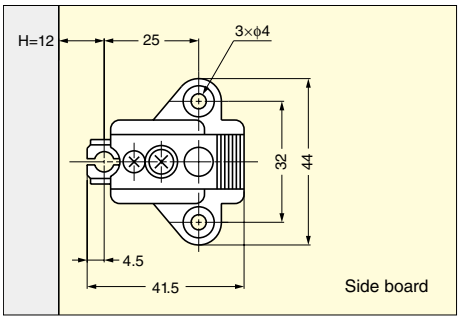

Standard height: 0 mm

Item Code	Item Name	Material	Finish	Weight	Carton
160-074-149	100-P4A-32-SUS304B	Stainless Steel (SUS304)	Polished	27 g	400 pcs

SYSTEM 37, 32 TYPE

STAINLESS 304 STEEL

100-P4A/32-3WAY-SUS304B

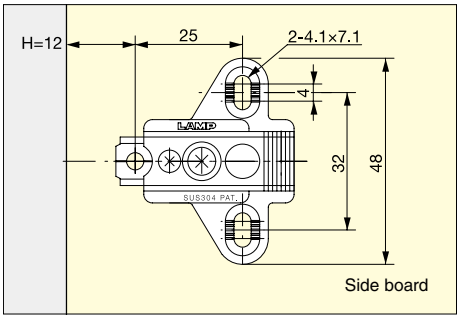

Standard height: 0 mm

Item Code	Item Name	Material	Finish	Weight	Carton
160-079-044	100-P4A/32-3WAY-SUS304B	Stainless Steel (SUS304)	Polished	26 g	400 pcs

120°Opening	19 mm Overlay	Overlay 14 - 19 mm	Cup Dia Φ 35 Bore Depth 13.5 mm Door Thickness 17 - 20 mm	Mounting Plate 100 Series (P.389-392)

Picture above is the combination of concealed hinge and mounting plate.

CONCEALED HINGE 120

Item Code	Item Name	Type	Material	Finish	Weight	Carton
160-073-930	120-34/19	w/o Catch	Body/Steel, Cup/Zinc Alloy (ZDC)	Chrome	65 g	200 pcs
160-073-935	120-C34/19	w/ Catch	Body/Steel, Cup/Zinc Alloy (ZDC)	Chrome	69 g	200 pcs

Features

Screw mount.

Sold Separately

100 series mounting plate (P.389-392).

• **Outline drawing S≈1/2**

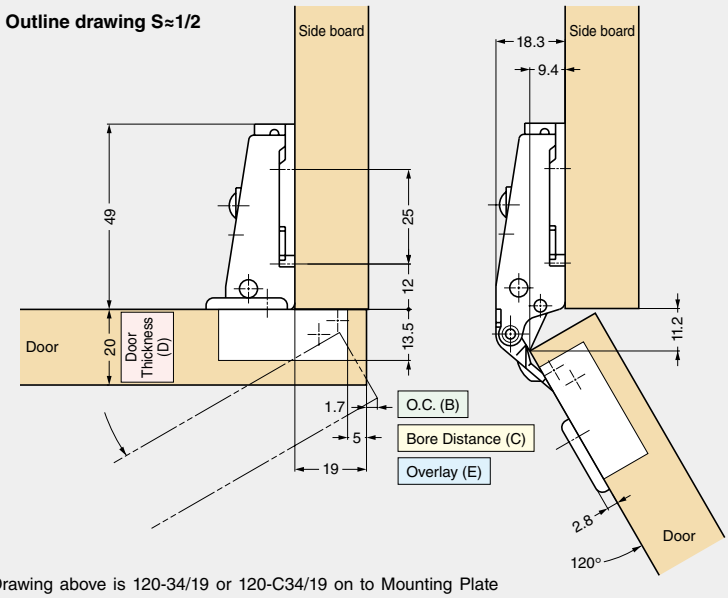

Drawing above is 120-34/19 or 120-C34/19 on to Mounting Plate 100-03A: Bore Distance 5 mm, Door Thickness 20 mm and 19 mm Overlay.

• **Locus chart S≈1/1**

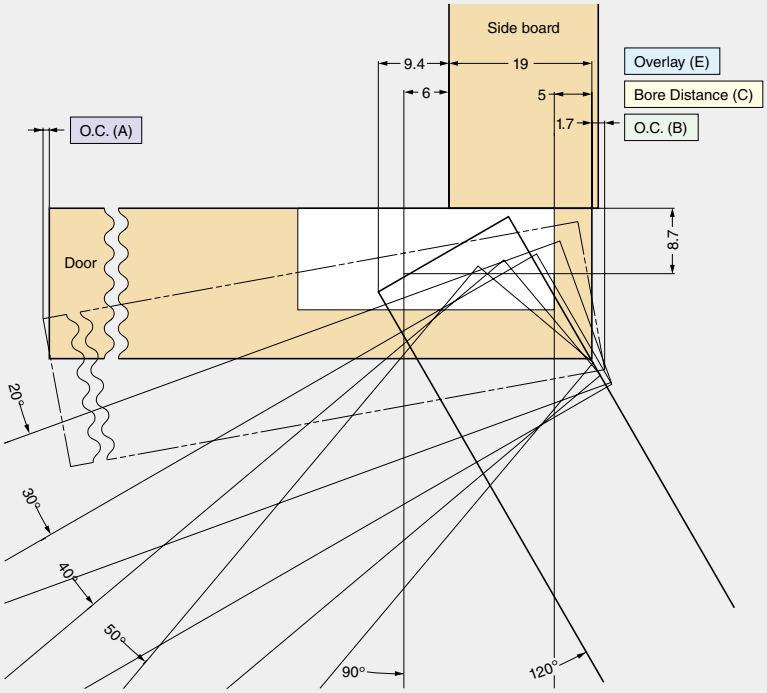

Drawing above is Bore Distance 5 mm, Door Thickness 20 mm, Side Board Thickness 20 mm and 19 mm Overlay.

Bore Distance (C)

Bore Distance (C)	3	4	5
Overlay (E)	17	18	19

For standard type mounting plate 0 mm thickness.
Turning the overlay adjustment screw or using distance plate (2 mm thickness) to adjust overlay (Max. - 6 mm).

Opening Clearance (O.C.)

Clearances for door edge O.C. (A) and hinge side O.C. (B) are necessary. O.C. (A) and (B) change depending on door thickness and bore distance (C). Refer to locus chart and tables below when designing cabinets.

O.C. (B)

Door Thickness (D)	Bore Distance (C)		
	3	4	5
17	1.1	1.1	1.1
18	1.3	1.3	1.3
19	1.5	1.5	1.5
20	2.7	2.0	1.7
21	4.5	3.7	2.7
22	6.5	5.5	4.5
	O.C. (B)		

Please refer to the locus chart if door thickness is over 20 mm.

O.C. (A)

Door Thickness (D)	Door Width			
20	300	400	500	600
	0.1	0.1	0.1	0.1
	O.C. (A)			

Cut Out Dimensions

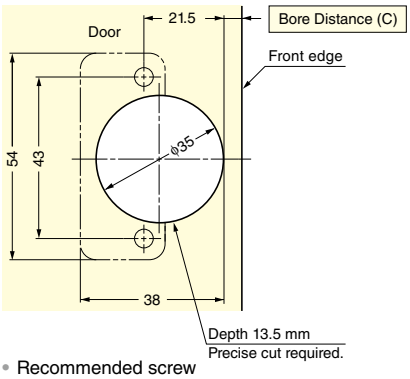

• Recommended screw
Size 3.5 raised countersunk head tapping screw or wood screw.

Door Dimensions and Number of Hinges

Please refer to P.394.

120°Opening | **14 mm Overlay** | Overlay 9 - 14 mm | Cup Dia Φ 35 Bore Depth 13.5 mm Door Thickness 17 - 20 mm | Mounting Plate 100 Series (P.389-392)

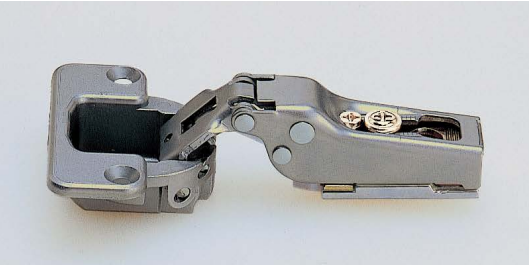

Picture above is the combination of concealed hinge and mounting plate.

CONCEALED HINGE 120

Item Code	Item Name	Type	Material	Finish	Weight	Carton
160-073-931	120-34/14	w/o Catch	Body/Steel, Cup/Zinc Alloy (ZDC)	Chrome	65 g	200 pcs
160-073-936	120-C34/14	w/ Catch	Body/Steel, Cup/Zinc Alloy (ZDC)	Chrome	69 g	200 pcs

Features

Screw mount.

Sold Separately

100 series mounting plate (P.389-392).

• **Outline drawing S≈1/2**

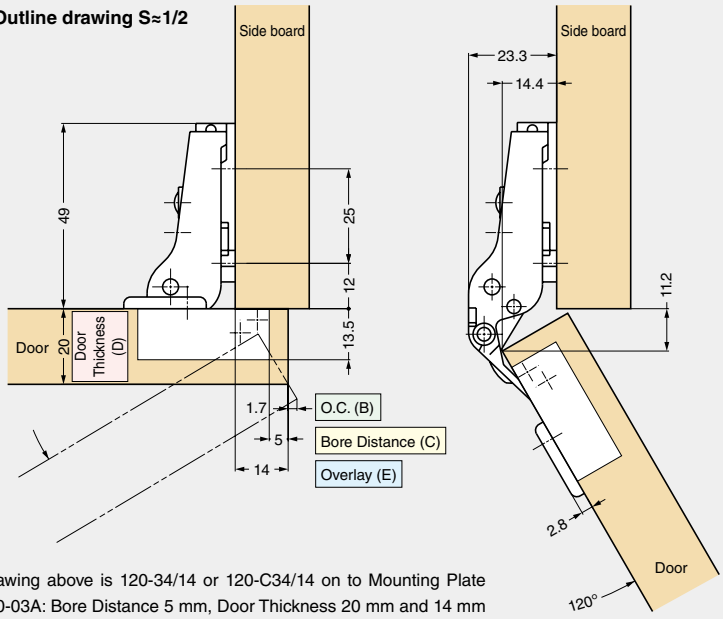

Drawing above is 120-34/14 or 120-C34/14 on to Mounting Plate 100-03A: Bore Distance 5 mm, Door Thickness 20 mm and 14 mm Overlay.

• **Locus chart S≈1/1**

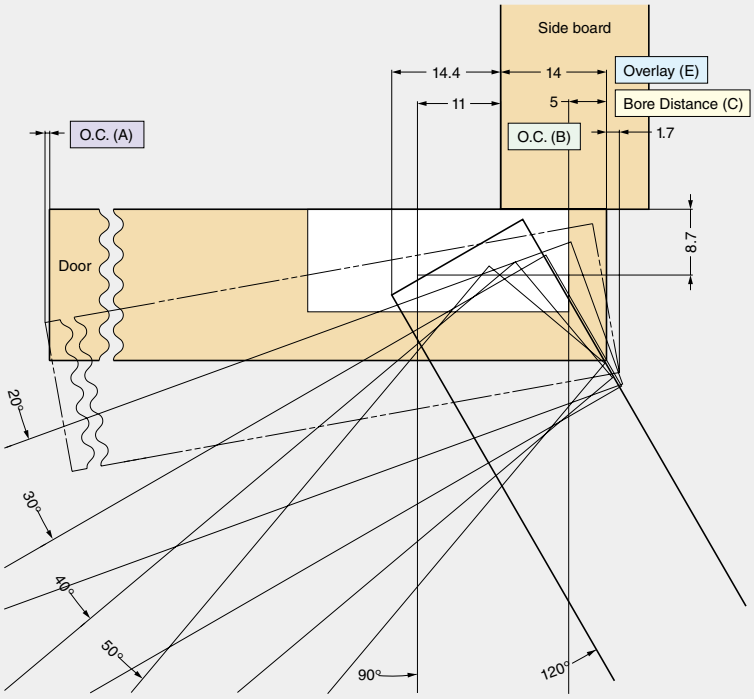

Drawing above is Bore Distance 5 mm, Door Thickness 20 mm, Side Board Thickness 20 mm and 14 mm Overlay.

Bore Distance (C)

Bore Distance (C)	3	4	5
Overlay (E)	12	13	14

For standard type mounting plate 0 mm thickness.
Turning the overlay adjustment screw or using distance plate (2 mm thickness) to adjust overlay (Max. - 6 mm).

Opening Clearance (O.C.)

Clearances for door edge O.C. (A) and hinge side O.C. (B) are necessary. O.C. (A) and (B) change depending on door thickness and bore distance (C). Refer to locus chart and tables below when designing cabinets.

O.C. (B)

Door Thickness (D)	Bore Distance (C)		
	3	4	5
17	1.1	1.1	1.1
18	1.3	1.3	1.3
19	1.5	1.5	1.5
20	2.7	2.0	1.7
21	4.5	3.7	2.7
22	6.5	5.5	4.5
	O.C. (B)		

Please refer to the locus chart if door thickness is over 20 mm.

O.C. (A)

Door Thickness (D)	Door Width			
	300	400	500	600
20	0.1	0.1	0.1	0.1
	O.C. (A)			

Cut Out Dimensions

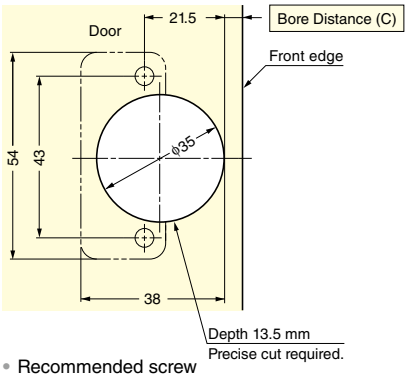

• Recommended screw
Size 3.5 raised countersunk head tapping screw or wood screw.

Door Dimensions and Number of Hinges

Please refer to P.394.

120°Opening	9 mm Overlay	Overlay 4 - 9 mm	Cup Dia Φ 35 Bore Depth 13.5 mm Door Thickness 17 - 20 mm	Mounting Plate 100 Series (P.389-392)

Picture above is the combination of concealed hinge and mounting plate.

CONCEALED HINGE 120

Item Code	Item Name	Type	Material	Finish	Weight	Carton
160-073-932	120-34/9	w/o Catch	Body/Steel, Cup/Zinc Alloy (ZDC)	Chrome	66 g	200 pcs
160-073-937	120-C34/9	w/ Catch	Body/Steel, Cup/Zinc Alloy (ZDC)	Chrome	72 g	200 pcs

Features

Screw mount.

Sold Separately

100 series mounting plate (P.389-392).

• **Outline drawing S≈1/2**

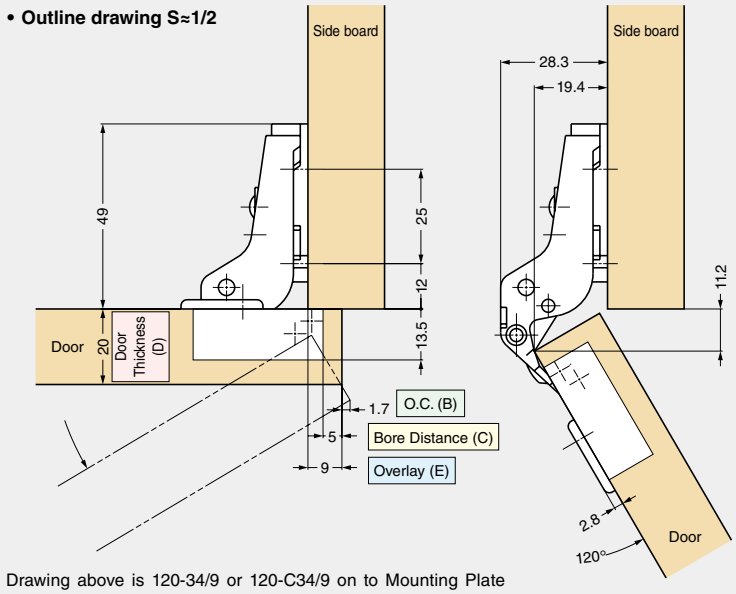

Drawing above is 120-34/9 or 120-C34/9 on to Mounting Plate 100-03A: Bore Distance 5 mm, Door Thickness 20 mm and 9 mm Overlay.

• **Locus chart S≈1/1**

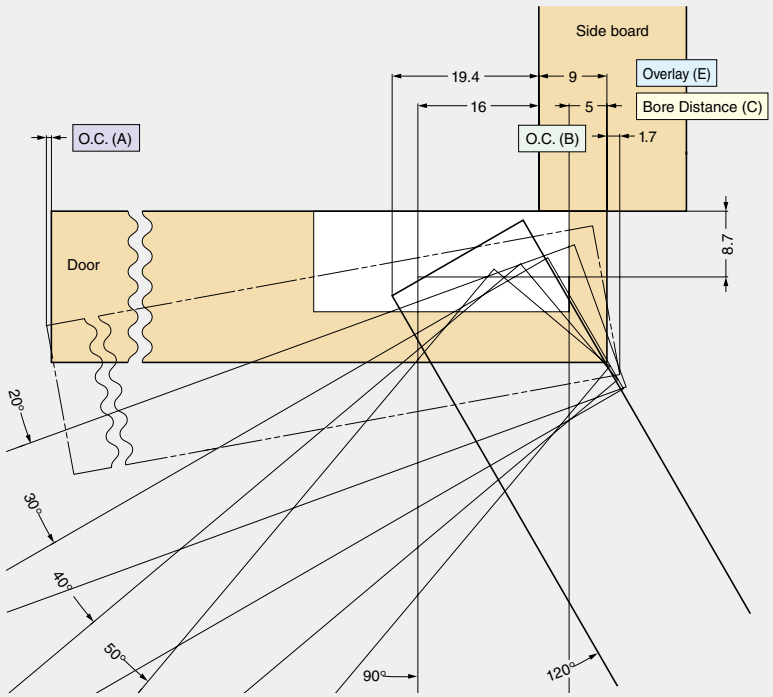

Drawing above is Bore Distance 5 mm, Door Thickness 20 mm, Side Board Thickness 20 mm and 9 mm Overlay.

Bore Distance (C)

Bore Distance (C)	3	4	5
Overlay (E)	7	8	9

For standard type mounting plate 0 mm thickness.
Turning the overlay adjustment screw or using distance plate (2 mm thickness) to adjust overlay (Max. - 6 mm).

Opening Clearance (O.C.)

Clearances for door edge O.C. (A) and hinge side O.C. (B) are necessary. O.C. (A) and (B) change depending on door thickness and bore distance (C). Refer to locus chart and tables below when designing cabinets.

O.C. (B)

Door Thickness (D)	Bore Distance (C)		
	3	4	5
17	1.1	1.1	1.1
18	1.3	1.3	1.3
19	1.5	1.5	1.5
20	2.7	2.0	1.7
21	4.5	3.7	2.7
22	6.5	5.5	4.5
	O.C. (B)		

Please refer to the locus chart if door thickness is over 20 mm.

O.C. (A)

Door Thickness (D)	Door Width			
20	300	400	500	600
	0.1	0.1	0.1	0.1
	O.C. (A)			

Cut Out Dimensions

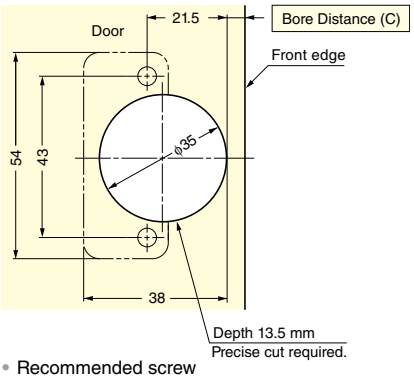

• Recommended screw
Size 3.5 raised countersunk head tapping screw or wood screw.

Door Dimensions and Number of Hinges

Please refer to P.394.

110°Opening | **Inset** | Cup Dia Φ 35 Bore Depth 13.5 mm Door Thickness 17 - 20 mm | Mounting Plate 100 Series (P.389-392)

Picture above is the combination of concealed hinge and mounting plate.

CONCEALED HINGE 120

Item Code	Item Name	Type	Material	Finish	Weight	Carton
160-073-933	120-34/0	w/o Catch	Zinc Alloy (ZDC)	Chrome	73 g	200 pcs
160-073-938	120-C34/0	w/ Catch	Zinc Alloy (ZDC)	Chrome	79 g	200 pcs

Features

Screw mount.

Sold Separately

100 series mounting plate (P.389-392).

• **Outline drawing S≈1/2**

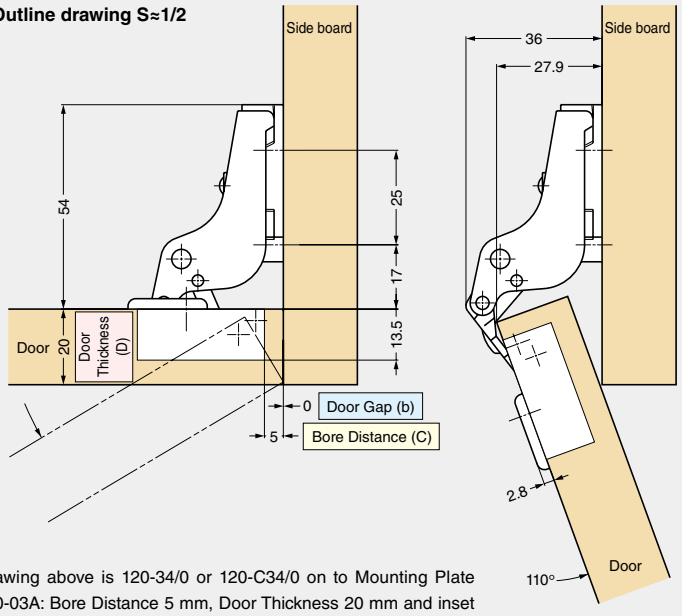

Drawing above is 120-34/0 or 120-C34/0 on to Mounting Plate 100-03A: Bore Distance 5 mm, Door Thickness 20 mm and inset use.

• **Locus chart S≈1/1**

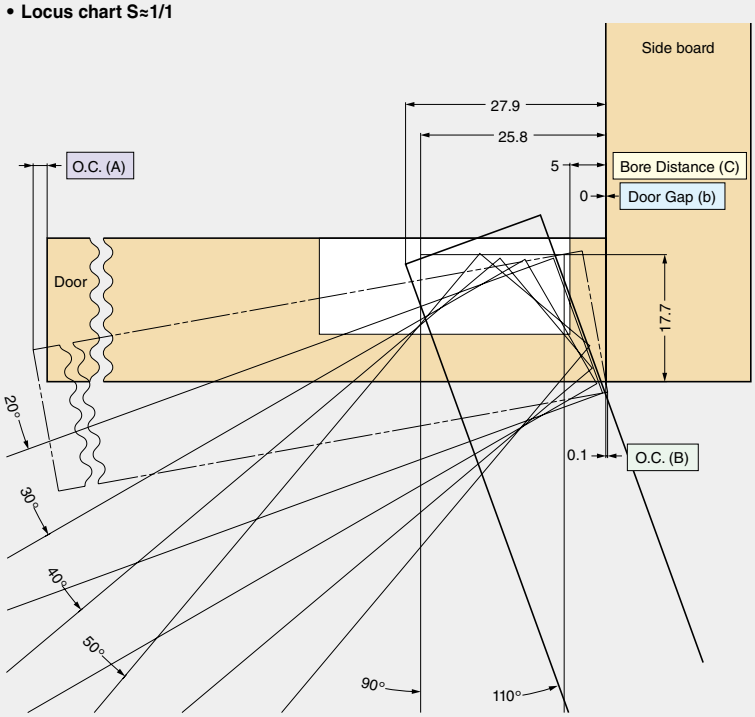

Drawing above is Bore Distance 5 mm, Door Thickness 20 mm, Side Board Thickness 20 mm and inset type.

Bore Distance (C)

Bore Distance (C)	3	4	5
Door Gap (b)	2	1	0

For standard type mounting plate 0 mm thickness.
Turning the overlay adjustment screw to adjust the gap.

Opening Clearance (O.C.)

Clearances for door edge O.C. (A) and hinge side O.C. (B) are necessary. O.C. (A) and (B) change depending on door thickness and bore distance (C). Refer to locus chart and tables below when designing cabinets.

O.C. (B)

Door Thickness (D)	Bore Distance (C)		
	3	4	5
17	0.1	0.1	0.1
18	0.1	0.1	0.1
19	0.5	0.1	0.1
20	2.0	1.0	0.1
21	3.5	2.6	1.5
22	5.0	4.0	3.0
	O.C. (B)		

Please refer to the locus chart if door thickness is over 20 mm.

O.C. (A)

Door Thickness (D)	Door Width			
20	300	400	500	600
	0.55	0.4	0.35	0.3
	O.C. (A)			

Cut Out Dimensions

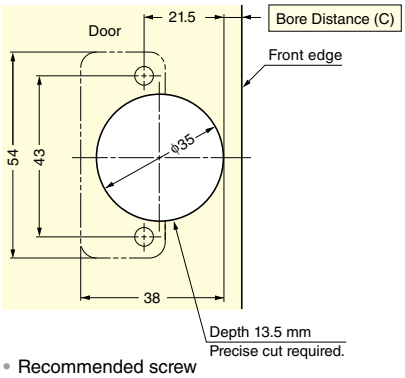

• Recommended screw
Size 3.5 raised countersunk head tapping screw or wood screw.

Door Dimensions and Number of Hinges

Please refer to P.394.

170°Opening	19 mm Overlay	Overlay 15 - 20 mm	Cup Dia Φ 35 Bore Depth 11 mm Door Thickness 15 - 20 mm	Mounting Plate 100 Series (P.389-392)

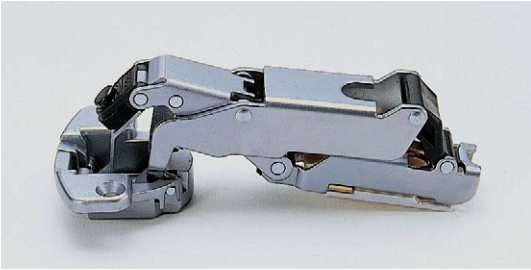

Picture above is the combination of concealed hinge and mounting plate.

CONCEALED HINGE 170

Item Code	Item Name	Type	Material	Finish	Weight	Carton
160-073-390	170-34/19	w/o Catch	Body/Steel, Cup/Zinc Alloy (ZDC)	Chrome	117 g	100 pcs
160-073-400	170-C34/19	w/ Catch	Body/Steel, Cup/Zinc Alloy (ZDC)	Chrome	125 g	100 pcs

Features

- Opening angle can be adjusted 140 - 170 degrees by turning the dial on the hinge.
- Screw mount.

Sold Separately

100 series mounting plate (P.389-392).

- **Outline drawing S≈1/2**

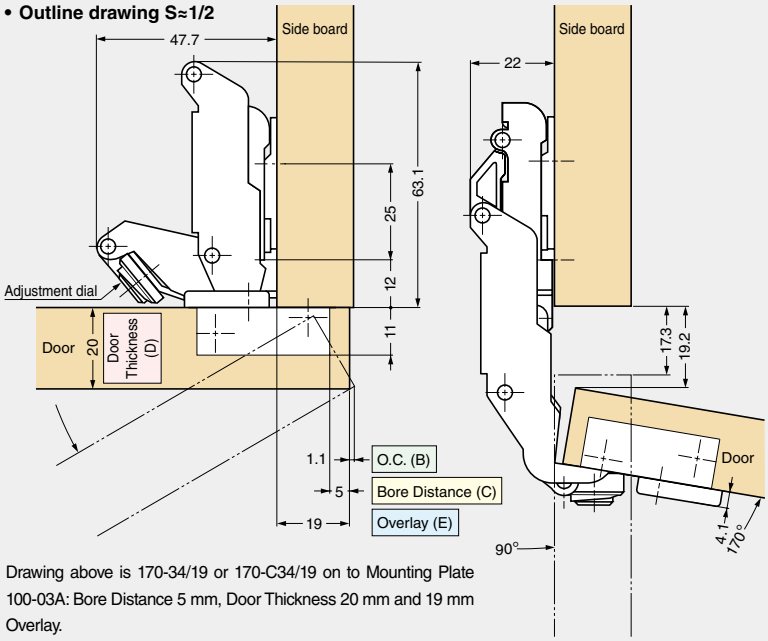

Drawing above is 170-34/19 or 170-C34/19 on to Mounting Plate 100-03A: Bore Distance 5 mm, Door Thickness 20 mm and 19 mm Overlay.

- **Locus chart S≈1/1**

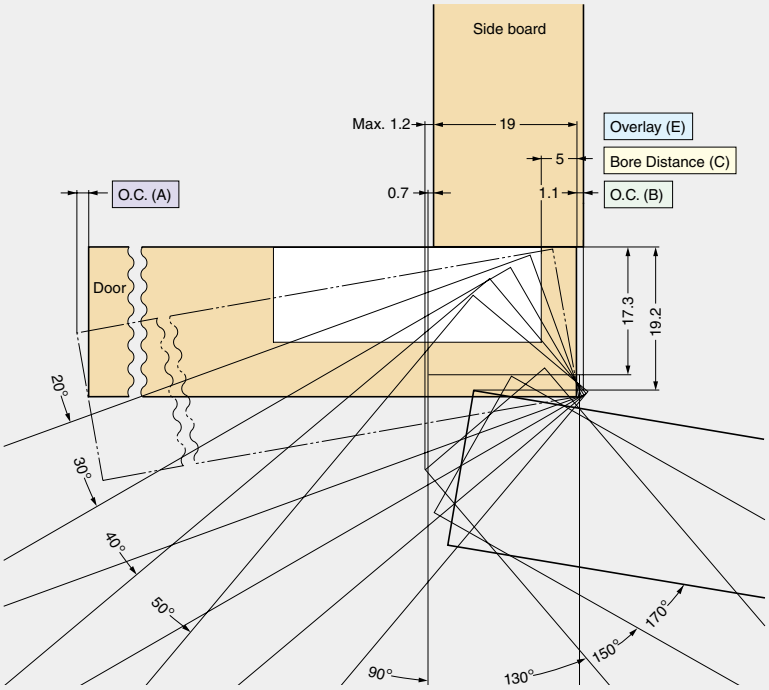

Drawing above is Bore Distance 5 mm, Door Thickness 20 mm, Side Board Thickness 20 mm and 19 mm Overlay.

Bore Distance (C)

Bore Distance (C)	3	4	5	6
Overlay (E)	17	18	19	20

For standard type mounting plate 0 mm thickness.
Turning the overlay adjustment screw or using distance plate (2 mm thickness) to adjust overlay (Max. - 6 mm).

Opening Clearance (O.C.)

Clearances for door edge O.C. (A) and hinge side O.C. (B) are necessary. O.C. (A) and (B) change depending on door thickness and bore distance (C). Refer to locus chart and tables below when designing cabinets.

O.C. (B)

Door Thickness (D)	Bore Distance (C) 3	4	5	6
15	0	0	0	0
16	0	0	0	0
17	0.1	0.1	0.1	0.1
18	0.1	0.1	0.1	0.1
19	1.1	0.8	0.3	0.1
20	2.5	1.7	1.1	0.6
21	3.5	2.7	2.0	1.5
22	4.5	3.7	2.9	2.3
	O.C. (B)			

Please refer to the locus chart if door thickness is over 20 mm.

O.C. (A)

Door Thickness (D) \ Door Width	300	400	500
15	0.7	0.6	0.5
20	0.7	0.6	0.5
22	0.7	0.6	0.5
	O.C. (A)		

Cut Out Dimensions

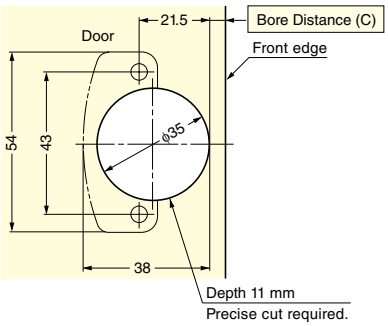

- Recommended screw
  Size 3.5 raised countersunk head tapping screw or wood screw.

Door Dimensions and Number of Hinges

Please refer to P.394.

170°Opening | **9 mm Overlay** | Overlay 5 - 10 mm | Cup Dia Φ 35 Bore Depth 11 mm Door Thickness 15 - 20 mm | Mounting Plate 100 Series (P.389-392)

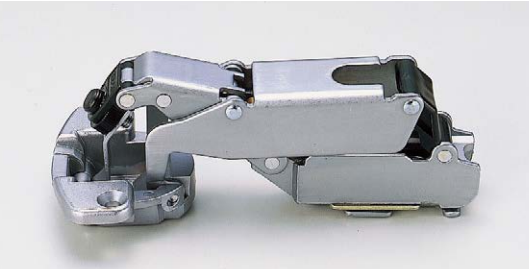

Picture above is the combination of concealed hinge and mounting plate.

CONCEALED HINGE 170

Item Code	Item Name	Type	Material	Finish	Weight	Carton
160-073-392	170-34/9	w/o Catch	Zinc Alloy (ZDC)	Chrome	133 g	100 pcs
160-073-402	170-C34/9	w/ Catch	Zinc Alloy (ZDC)	Chrome	141 g	100 pcs

Features

- Opening angle can be adjusted 140 - 170 degrees by turning the dial on the hinge.
- Screw mount.

Sold Separately

100 series mounting plate (P.389-392).

- **Outline drawing S≈1/2**

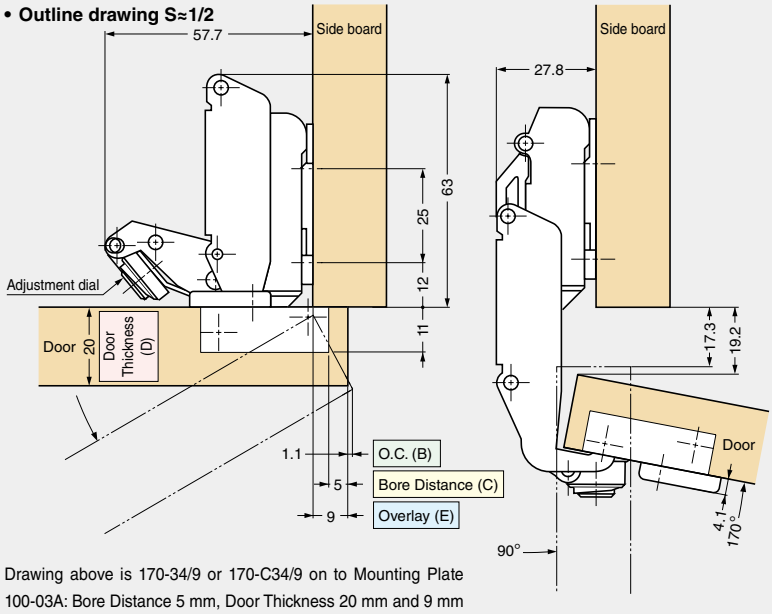

Drawing above is 170-34/9 or 170-C34/9 on to Mounting Plate 100-03A: Bore Distance 5 mm, Door Thickness 20 mm and 9 mm Overlay.

- **Locus chart S≈1/1**

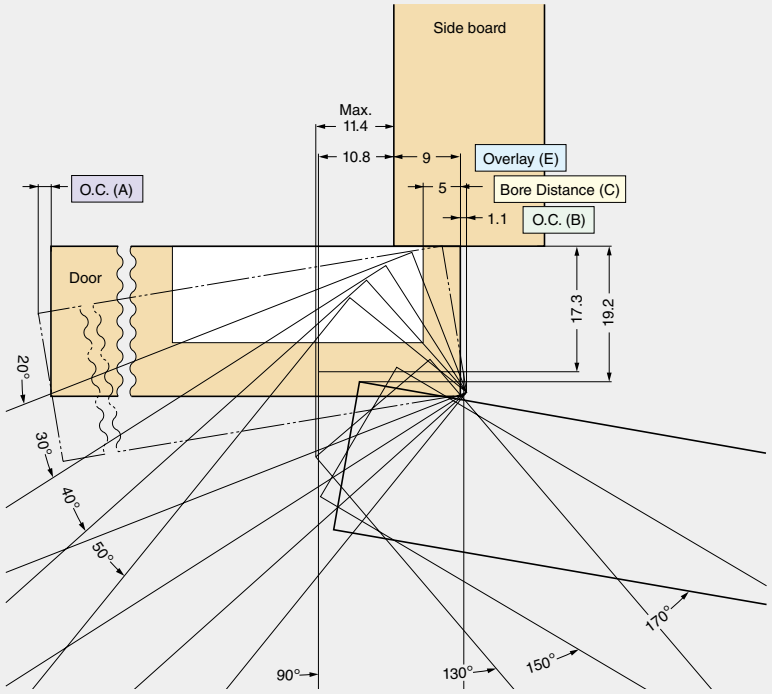

Drawing above is Bore Distance 5 mm, Door Thickness 20 mm, Side Board Thickness 20 mm and 9 mm Overlay.

Bore Distance (C)

Bore Distance (C)	3	4	5	6
Overlay (E)	7	8	9	10

For standard type mounting plate 0 mm thickness.
Turning the overlay adjustment screw or using distance plate (2 mm thickness) to adjust overlay (Max. - 6 mm).

Opening Clearance (O.C.)

Clearances for door edge O.C. (A) and hinge side O.C. (B) are necessary. O.C. (A) and (B) change depending on door thickness and bore distance (C). Refer to locus chart and tables below when designing cabinets.

O.C. (B)

Door Thickness (D)	Bore Distance (C) 3	4	5	6
15	0	0	0	0
16	0	0	0	0
17	0	0	0	0
18	0.1	0.1	0	0
19	1.0	0.6	0.2	0
20	2.3	1.7	1.1	0.6
21	3.5	2.6	2.0	1.5
22	4.4	3.5	2.9	2.2
	O.C. (B)			

Please refer to the locus chart if door thickness is over 20 mm.

O.C. (A)

Door Thickness (D) \ Door Width	300	400	500
15	0.7	0.5	0.5
20	0.7	0.5	0.5
22	0.7	0.5	0.5
	O.C. (A)		

Cut Out Dimensions

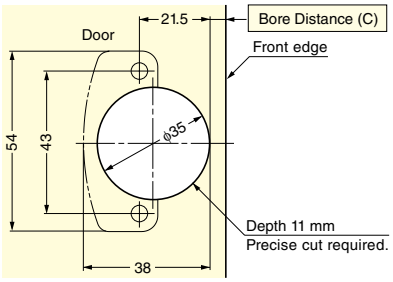

- Recommended screw
  Size 3.5 raised countersunk head tapping screw or wood screw.

Door Dimensions and Number of Hinges

Please refer to P.394.

HINGES

CONCEALED HINGE

170°Opening | **Inset** | **Cup Dia Φ 35 Bore Depth 11 mm Door Thickness 15 - 20 mm** | **Mounting Plate 100 Series (P.389-392)**

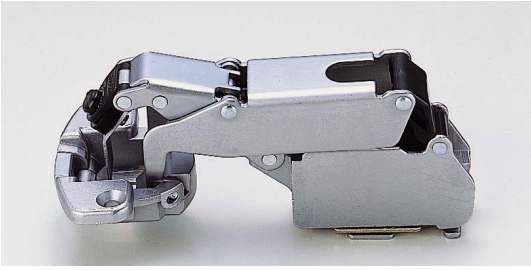

Picture above is the combination of concealed hinge and mounting plate.

CONCEALED HINGE 170

Item Code	Item Name	Type	Material	Finish	Weight	Carton
160-073-393	170-34/0	w/o Catch	Zinc Alloy (ZDC)	Chrome	153 g	100 pcs
160-073-403	170-C34/0	w/ Catch	Zinc Alloy (ZDC)	Chrome	161 g	100 pcs

Features

- Opening angle can be adjusted 140 - 170 degrees by turning the dial on the hinge.
- Screw mount.

Sold Separately

100 series mounting plate (P.389-392).

- **Outline drawing S≈1/2**

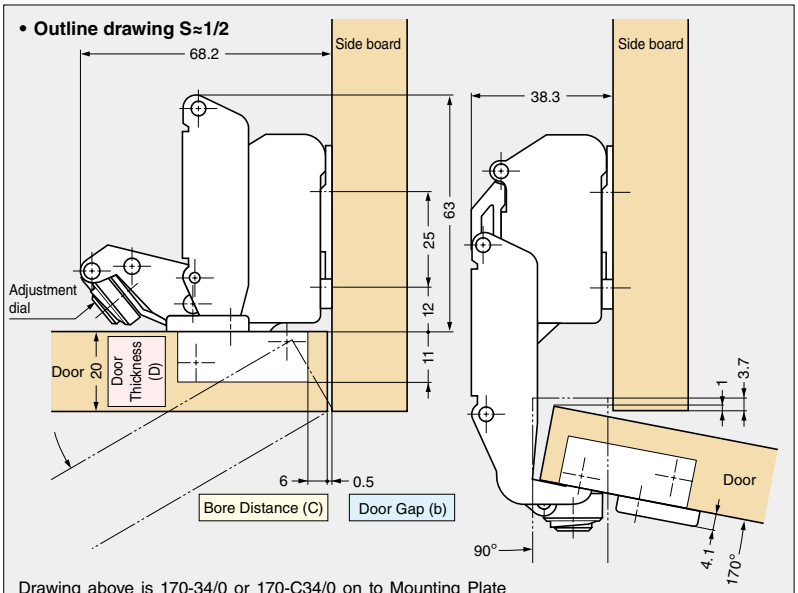

Drawing above is 170-34/0 or 170-C34/0 on to Mounting Plate 100-03A: Bore Distance 6 mm, Door Thickness 20 mm and inset type.

- **Locus chart S≈1/1**

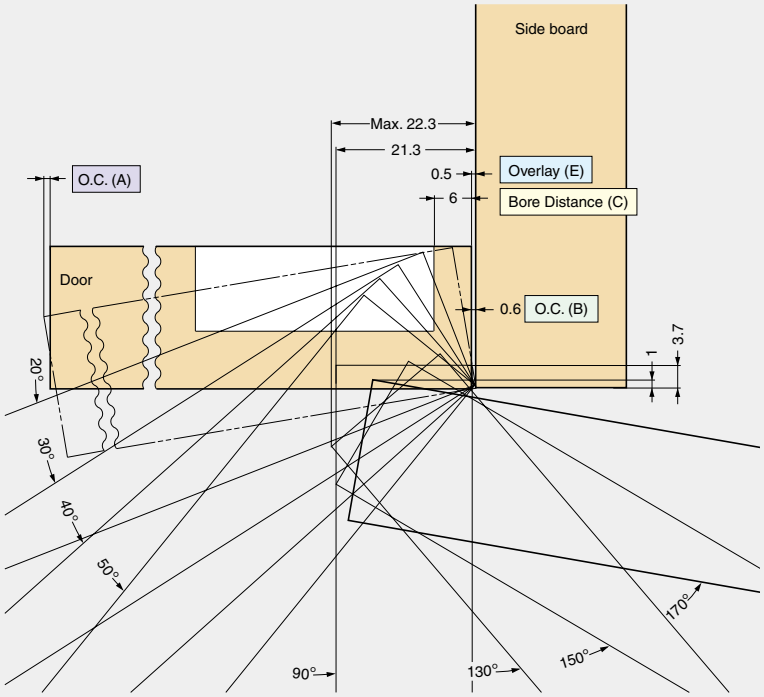

Drawing above is Bore Distance 6 mm, Door Thickness 20 mm, Side Board Thickness 20 mm and inset type.

Bore Distance (C)

Bore Distance (C)	3	4	5	6
Door Gap (b)	3.5	2.5	1.5	0.5

For standard type mounting plate 0 mm thickness.
Turning the overlay adjustment screw to adjust the gap.

Opening Clearance (O.C.)

Clearances for door edge O.C. (A) and hinge side O.C. (B) are necessary. O.C. (A) and (B) change depending on door thickness and bore distance (C). Refer to locus chart and tables below when designing cabinets.

O.C. (B)

Door Thickness (D)	Bore Distance (C) 3	4	5	6
15	0	0	0	0
16	0	0	0	0
17	0	0	0	0
18	0.1	0.1	0	0
19	1.0	0.6	0.2	0
20	2.3	1.7	1.1	0.6
21	3.5	2.6	2.0	1.5
22	4.4	3.5	2.9	2.2
	O.C. (B)			

Please refer to the locus chart if door thickness is over 20 mm.

O.C. (A)

Door Thickness (D) \ Door Width	300	400	500
15	0.7	0.5	0.5
20	0.7	0.5	0.5
22	0.7	0.5	0.5
	O.C. (A)		

Cut Out Dimensions

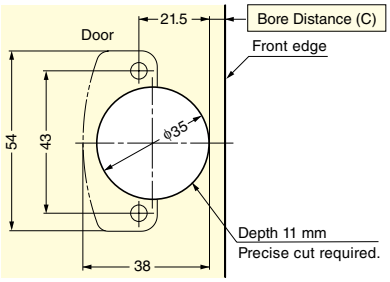

- Recommended screw
  Size 3.5 raised countersunk head tapping screw or wood screw.

Door Dimensions and Number of Hinges

Please refer to P.394.

160°Opening | **28 mm Overlay** | Overlay 19 - 28 mm | Cup Dia Φ 40 Bore Depth 15 mm Door Thickness 18 - 34 mm | Mounting Plate 100 Series (P.389-392)

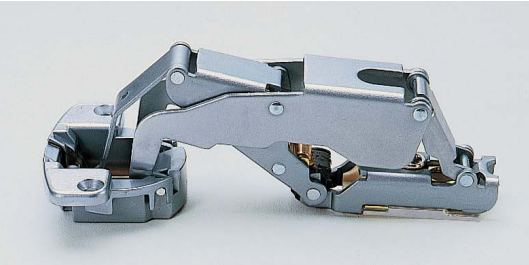

Picture above is the combination of concealed hinge and mounting plate.

CONCEALED HINGE H160

Item Code	Item Name	Type	Material	Finish	Weight	Carton
160-073-620	H160-34/28	w/o Catch	Body/Steel, Cup/Zinc Alloy (ZDC)	Chrome	182 g	100 pcs
160-073-630	H160-C34/28	w/ Catch	Body/Steel, Cup/Zinc Alloy (ZDC)	Chrome	195 g	100 pcs

Features

Screw mount.

Sold Separately

100 series mounting plate (P.389-392).

• **Outline drawing S≈1/2**

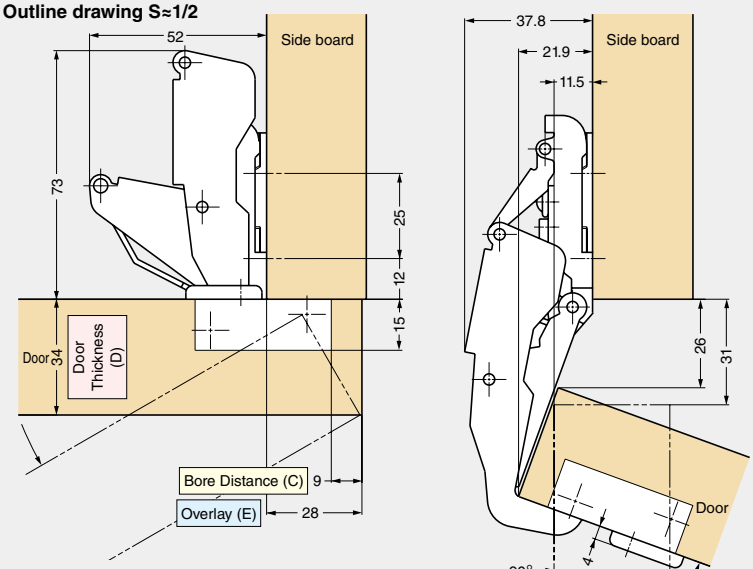

Drawing above is H160-34/28 or H160-C34/28 on to Mounting Plate 100-03A: Bore Distance 9 mm, Door Thickness 34 mm and 28 mm Overlay.

• **Locus chart S≈1/1**

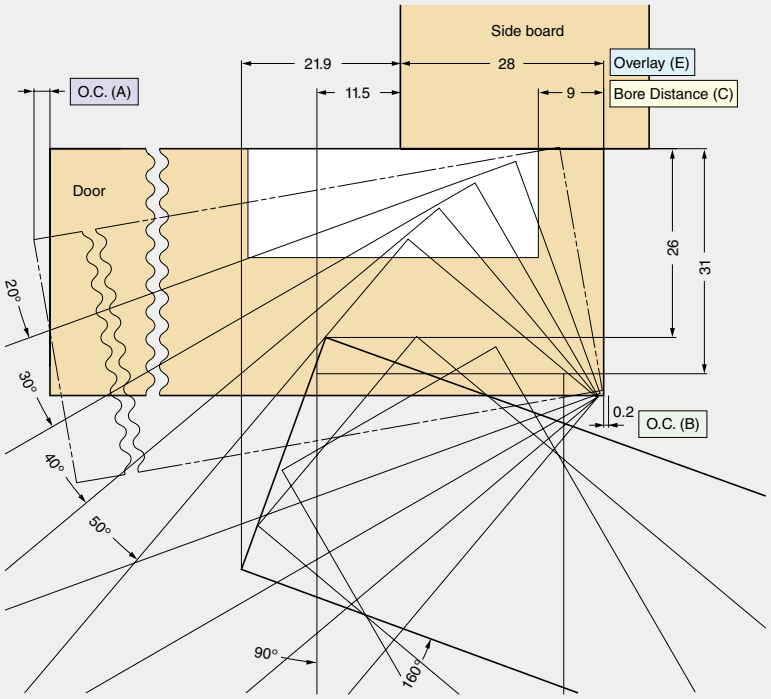

Drawing above is Bore Distance 9 mm, Door Thickness 34 mm, Side Board Thickness 34 mm and 28 mm Overlay.

Bore Distance (C)

Bore Distance (C)	3	4	5	6	7	8	9
Overlay (E)	22	23	24	25	26	27	28

For standard type mounting plate 0 mm thickness.
Turning the overlay adjustment screw or using distance plate (2 mm thickness) to adjust overlay (Max. - 6 mm).

Opening Clearance (O.C.)

Clearances for door edge O.C. (A) and hinge side O.C. (B) are necessary. O.C. (A) and (B) change depending on door thickness and bore distance (C). Refer to locus chart and tables below when designing cabinets.

O.C. (B)

Door Thickness (D)	Bore Distance (C)						
	3	4	5	6	7	8	9
Max. 33	Max. 0.1						
34	0.2	0.2	0.2	0.2	0.2	0.2	0.2
35	0.3	0.3	0.3	0.3	0.3	0.3	0.3
36	2.0	1.6	1.5	1.4	1.0	0.7	0.5
37	3.7	3.1	2.7	2.4	2.0	1.4	0.9
38	5.0	4.4	3.8	3.3	2.8	2.2	1.7
39	6.2	5.4	4.9	4.3	3.7	3.0	2.6
40	7.2	6.4	5.7	5.3	4.6	3.9	3.4
	O.C. (B)						

Please refer to the locus chart if door thickness is over 34 mm.

O.C. (A)

Door Thickness (D) \ Door Width	300	400	500	600
20	1.6	1.1	1.0	0.9
30	2.2	1.4	1.1	1.0
34	2.2	1.5	1.1	1.0
	O.C. (A)			

Cut Out Dimensions

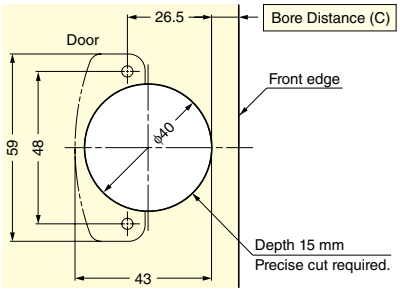

• Recommended screw
Size 3.5 raised countersunk head tapping screw or wood screw.

Door Dimensions and Number of Hinges

Please refer to P.394.

160°Opening	23 mm Overlay	Overlay 14 - 23 mm	Cup Dia Φ 40 Bore Depth 15 mm Door Thickness 18 - 34 mm	Mounting Plate 100 Series (P.389-392)

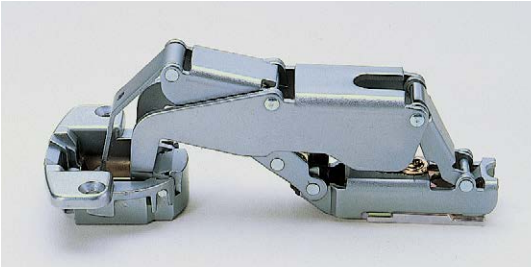

Picture above is the combination of concealed hinge and mounting plate.

CONCEALED HINGE H160

Item Code	Item Name	Type	Material	Finish	Weight	Carton
160-073-621	H160-34/23	w/o Catch	Body/Steel, Cup/Zinc Alloy (ZDC)	Chrome	186 g	100 pcs
160-073-631	H160-C34/23	w/ Catch	Body/Steel, Cup/Zinc Alloy (ZDC)	Chrome	200 g	100 pcs

Features

Screw mount.

Sold Separately

100 series mounting plate (P.389-392).

• **Outline drawing S≈1/2**

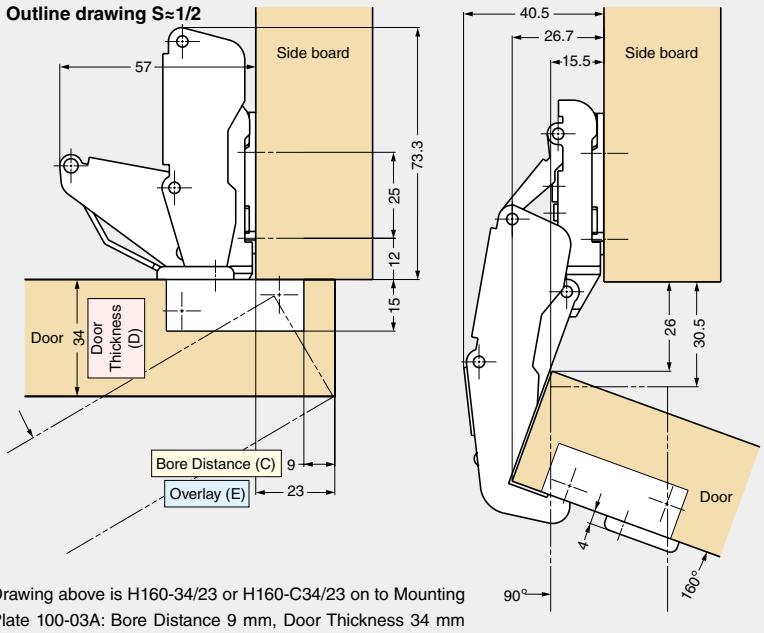

Drawing above is H160-34/23 or H160-C34/23 on to Mounting Plate 100-03A: Bore Distance 9 mm, Door Thickness 34 mm and 23 mm Overlay.

• **Locus chart S≈1/1**

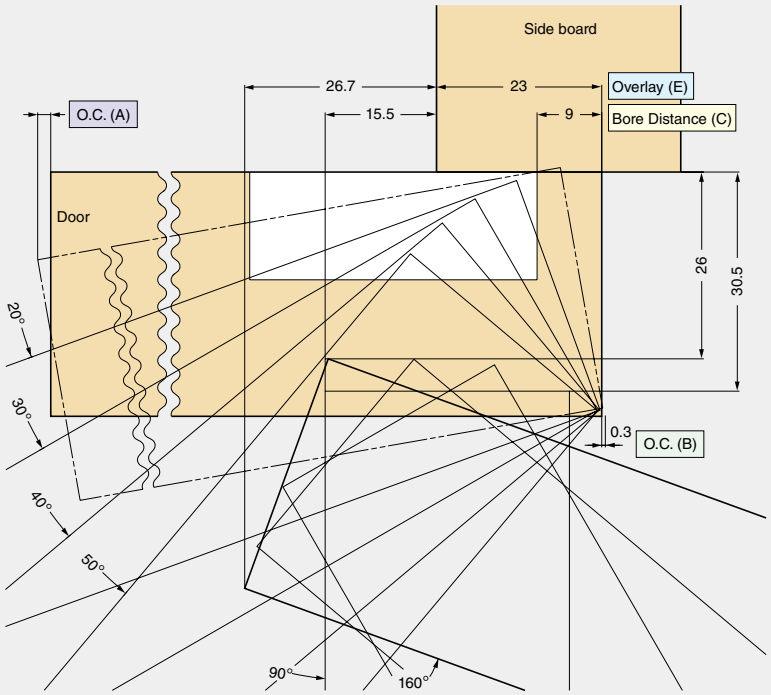

Drawing above is Bore Distance 9 mm, Door Thickness 34 mm, Side Board Thickness 34 mm and 23 mm Overlay.

Bore Distance (C)

Bore Distance (C)	3	4	5	6	7	8	9
Overlay (E)	17	18	19	20	21	22	23

For standard type mounting plate 0 mm thickness.
Turning the overlay adjustment screw or using distance plate (2 mm thickness) to adjust overlay (Max. - 6 mm).

Opening Clearance (O.C.)

Clearances for door edge O.C. (A) and hinge side O.C. (B) are necessary. O.C. (A) and (B) change depending on door thickness and bore distance (C). Refer to locus chart and tables below when designing cabinets.

O.C. (B)

Door Thickness (D)	Bore Distance (C)						
	3	4	5	6	7	8	9
Max. 33	Max. 0.2						
34	0.3	0.3	0.3	0.3	0.3	0.3	0.3
35	0.7	0.7	0.7	0.7	0.7	0.6	0.5
36	3.2	3.0	2.7	2.3	1.6	1.3	0.9
37	5.0	4.4	3.8	3.2	2.6	2.1	1.6
38	6.2	5.5	4.8	4.2	3.5	2.9	2.4
39	7.2	6.4	5.7	5.1	4.4	3.9	3.3
40	8.3	7.3	6.6	6.0	5.4	4.7	4.2
	O.C. (B)						

Please refer to the locus chart if door thickness is over 34 mm.

O.C. (A)

Door Thickness (D) \ Door Width	300	400	500	600
20	1.4	1.1	0.8	0.7
30	1.8	1.3	1.0	0.8
34	1.8	1.3	1.0	0.8
	O.C. (A)			

Cut Out Dimensions

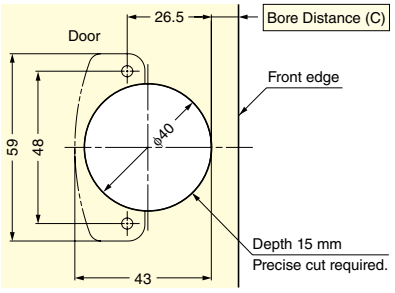

• Recommended screw
Size 3.5 raised countersunk head tapping screw or wood screw.

Door Dimensions and Number of Hinges

Please refer to P.394.

160°Opening | **18 mm Overlay** | Overlay 9 - 18 mm | Cup Dia Φ 40 Bore Depth 15 mm Door Thickness 18 - 34 mm | Mounting Plate 100 Series (P.389-392)

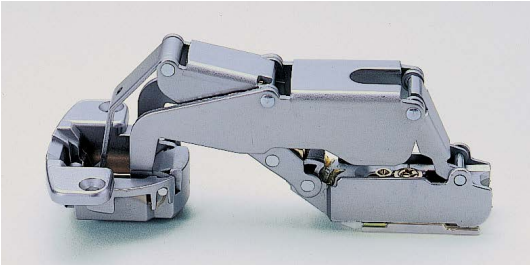

Picture above is the combination of concealed hinge and mounting plate.

CONCEALED HINGE H160

Item Code	Item Name	Type	Material	Finish	Weight	Carton
160-073-622	H160-34/18	w/o Catch	Zinc Alloy (ZDC)	Chrome	193 g	100 pcs
160-073-632	H160-C34/18	w/ Catch	Zinc Alloy (ZDC)	Chrome	205 g	100 pcs

Features

Screw mount.

Sold Separately

100 series mounting plate (P.389-392).

• **Outline drawing S≈1/2**

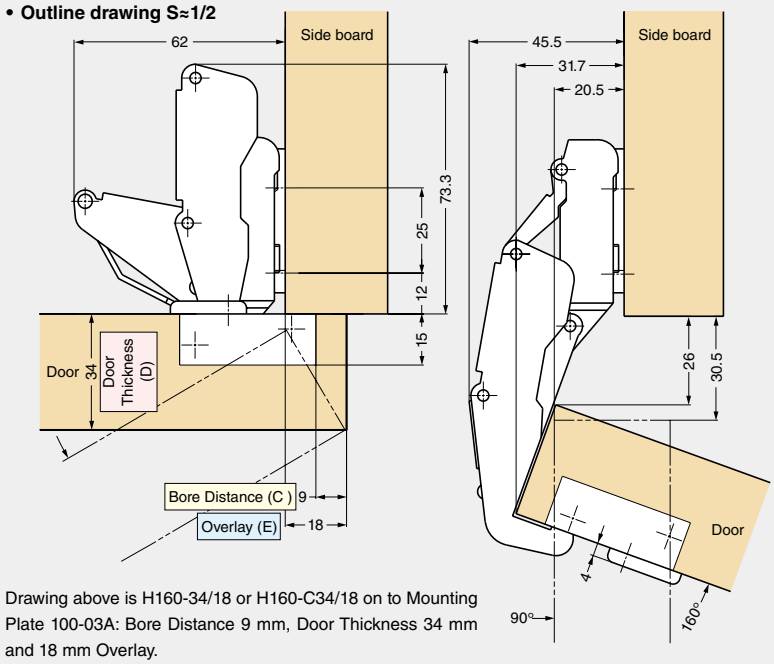

Drawing above is H160-34/18 or H160-C34/18 on to Mounting Plate 100-03A: Bore Distance 9 mm, Door Thickness 34 mm and 18 mm Overlay.

• **Locus chart S≈1/1**

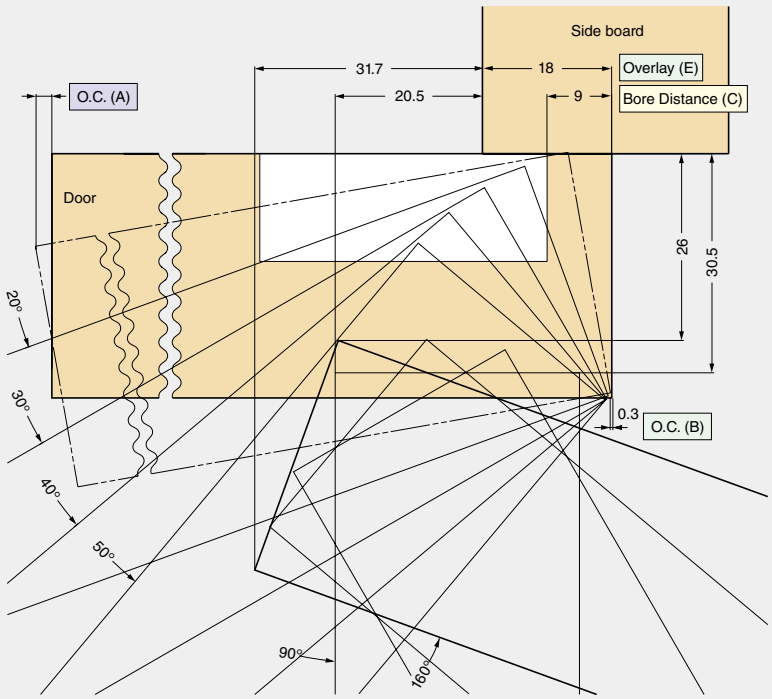

Drawing above is Bore Distance 9 mm, Door Thickness 34 mm, Side Board Thickness 34 mm and 18 mm Overlay.

Bore Distance (C)

Bore Distance (C)	3	4	5	6	7	8	9
Overlay (E)	12	13	14	15	16	17	18

For standard type mounting plate 0 mm thickness.
Turning the overlay adjustment screw or using distance plate (2 mm thickness) to adjust overlay (Max. - 6 mm).

Opening Clearance (O.C.)

Clearances for door edge O.C. (A) and hinge side O.C. (B) are necessary. O.C. (A) and (B) change depending on door thickness and bore distance (C). Refer to locus chart and tables below when designing cabinets.

O.C. (B)

Door Thickness (D)	Bore Distance (C)						
	3	4	5	6	7	8	9
Max. 33	Max. 0.2						
34	0.3	0.3	0.3	0.3	0.3	0.3	0.3
35	0.7	0.7	0.7	0.7	0.7	0.6	0.5
36	3.2	3.0	2.7	2.3	1.6	1.3	0.9
37	5.0	4.4	3.8	3.2	2.6	2.1	1.6
38	6.2	5.5	4.8	4.2	3.5	2.9	2.4
39	7.2	6.4	5.7	5.1	4.4	3.9	3.3
40	8.3	7.3	6.6	6.0	5.4	4.7	4.2
	O.C. (B)						

Please refer to the locus chart if door thickness is over 34 mm.

O.C. (A)

Door Thickness (D) \ Door Width	300	400	500	600
20	1.4	1.1	0.8	0.7
30	1.8	1.3	1.0	0.8
34	1.8	1.3	1.0	0.8
	O.C. (A)			

Cut Out Dimensions

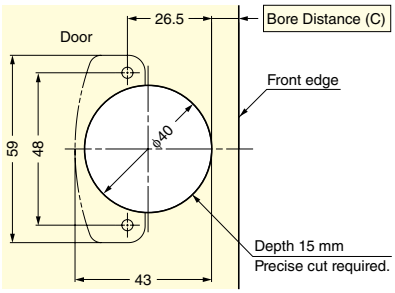

• Recommended screw
Size 3.5 raised countersunk head tapping screw or wood screw.

Door Dimensions and Number of Hinges

Please refer to P.394.

HINGES

CONCEALED HINGE

160°Opening | **Inset** | **Cup Dia Φ 40 Bore Depth 15 mm Door Thickness 18 - 34 mm** | **Mounting Plate 100 Series (P.389-392)**

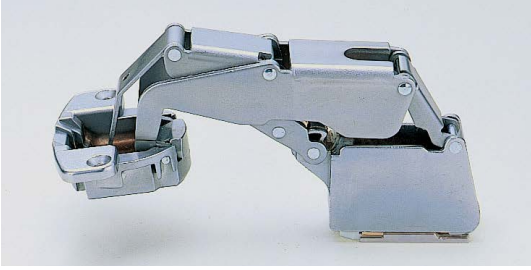

Picture above is the combination of concealed hinge and mounting plate.

CONCEALED HINGE H160

Item Code	Item Name	Type	Material	Finish	Weight	Carton
160-073-623	H160-34/0	w/o Catch	Zinc Alloy (ZDC)	Chrome	234 g	100 pcs
160-073-633	H160-C34/0	w/ Catch	Zinc Alloy (ZDC)	Chrome	242 g	100 pcs

Option

100 series mounting plate (P.389-392).

• **Outline drawing S≈1/2**

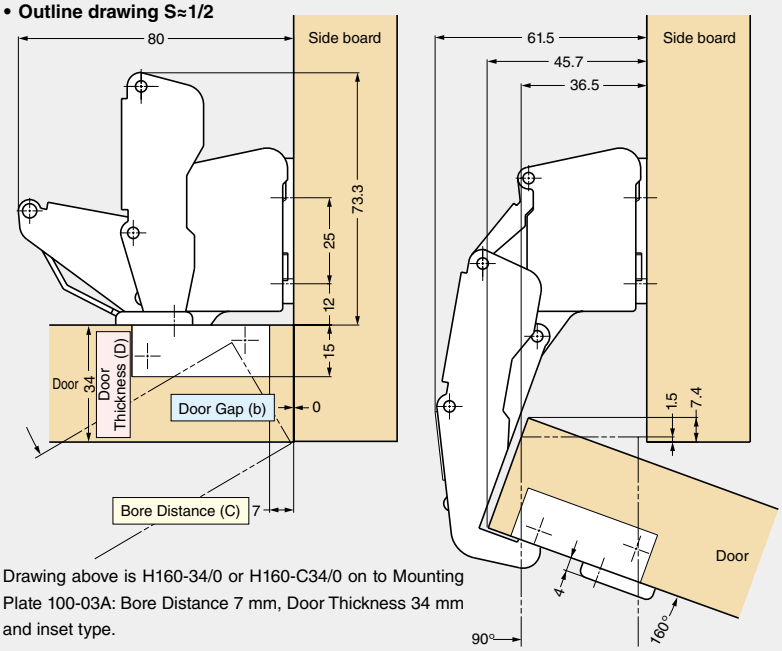

Drawing above is H160-34/0 or H160-C34/0 on to Mounting Plate 100-03A: Bore Distance 7 mm, Door Thickness 34 mm and inset type.

• **Locus chart S≈1/1**

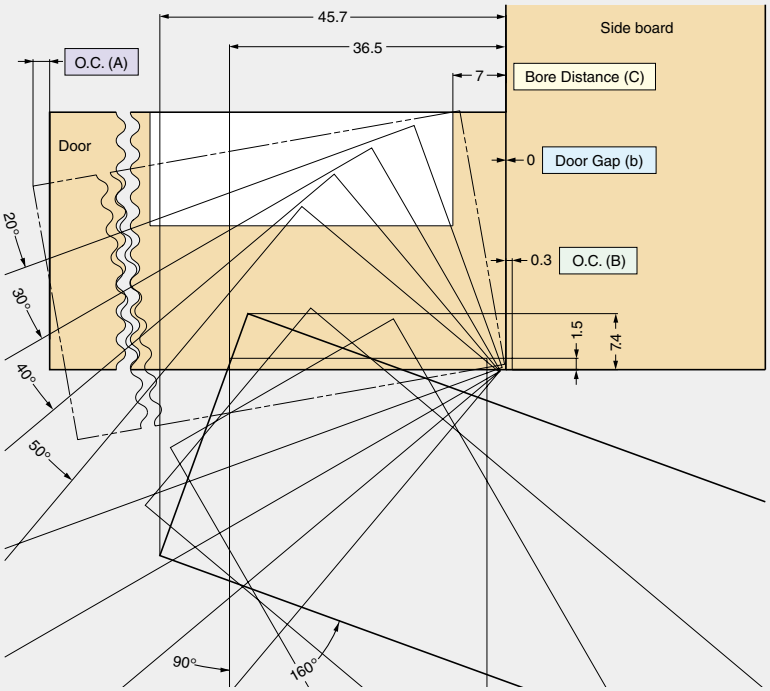

Drawing above is Bore Distance 7 mm, Door Thickness 34 mm, Side Board Thickness 34 mm and inset type.

Bore Distance (C)

Bore Distance (C)	3	4	5	6	7
Door Gap (b)	4	3	2	1	0

For standard type mounting plate 0 mm thickness.
Turning the overlay adjustment screw to adjust the gap.

Opening Clearance (O.C.)

Clearances for door edge O.C. (A) and hinge side O.C. (B) are necessary. O.C. (A) and (B) change depending on door thickness and bore distance (C). Refer to locus chart and tables below when designing cabinets.

O.C. (B)

Door Thickness (D)	Bore Distance (C)				
	3	4	5	6	7
Max. 30	Max. 0.1				
31	0.1	0.1	0.1	0.1	0.1
32	0.2	0.2	0.2	0.2	0.2
33	0.2	0.2	0.2	0.2	0.2
34	0.3	0.3	0.3	0.3	0.3
35	0.9	0.9	0.9	0.8	0.8
36	3.4	3.1	2.8	2.2	1.6
	O.C. (B)				

Please refer to the locus chart if door thickness is over 34 mm.

O.C. (A)

Door Thickness (D) \ Door Width	300	400	500	600
20	1.4	1.1	0.8	0.7
30	1.7	1.3	1.0	0.8
34	1.7	1.3	1.0	0.8
	O.C. (A)			

Cut Out Dimensions

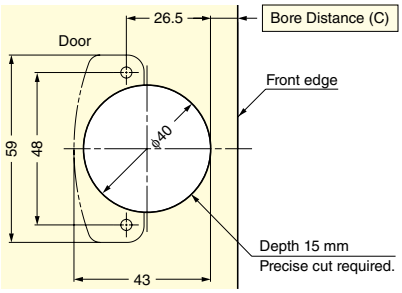

• Recommended screw
Size 3.5 raised countersunk head tapping screw or wood screw.

Door Dimensions and Number of Hinges

Please refer to P.394.

MOUNTING PLATE 100 SERIES

STANDARD TYPE

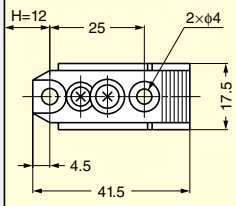

- 100-01 100-03
- 100-03A

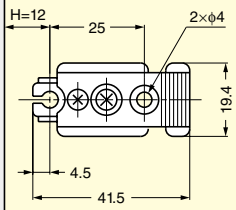

- 100-P3A

Value of H: Door thickness + 17 mm in use of INSET type (Door thickness + 12 mm in use of INSET type of H160 or 170 hinge).

100-01

Features

Standard height: 0 mm

Recommended Screw

Size 3.5 tapping screw or wood screw (do not use flat head screws).

Item Code	Item Name	Material	Colour	Weight	Carton
160-074-070	100-01	Polyamide (PA)	Ivory	7 g	800 pcs

100-03

Features

Standard height: 0 mm

Recommended Screw

Size 3.5 tapping screw or wood screw (do not use flat head screws).

Item Code	Item Name	Material	Finish	Weight	Carton
160-074-079	100-03	Zinc Alloy (ZDC)	Chrome	22 g	800 pcs

100-03A

Features

- Overlay adjustable.
- Standard height: 0 mm

Recommended Screw

Size 3.5 tapping screw or wood screw (do not use flat head screws).

*The finish has been changed. Please check with actual item.

Item Code	Item Name	Material	Finish	Weight	Carton
160-074-083	100-03A	Zinc Alloy (ZDC)/Steel	Nickel/Yellow Zinc Chromate	28 g	800 pcs

100-P3A

Features

- Overlay adjustable.
- Standard height: 0 mm

Recommended Screw

Size 3.5 tapping screw or wood screw (do not use flat head screws).

*The finish has been changed. Please check with actual item.

Item Code	Item Name	Material	Finish	Weight	Carton
160-074-244	100-P3A	Steel	Chrome/Yellow Zinc Chromate	22 g	800 pcs

MOUNTING PLATE 100 SERIES

SYSTEM 30 TYPE

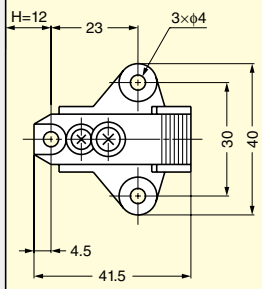

• 100-02-30 100-04-30

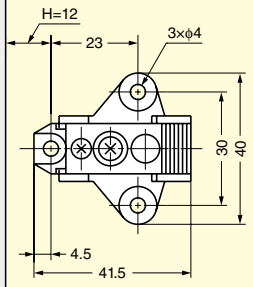

• 100-02A-30

100-02-30

Features

Standard height: 0 mm

Recommended Screw

Size 3.5 tapping screw or wood screw (do not use flat head screws).

Item Code	Item Name	Material	Colour	Weight	Carton
160-074-071	100-02-30	Polyamide (PA)	Ivory	8 g	400 pcs

100-04-30

Features

Standard height: 0 mm

Recommended Screw

Size 3.5 tapping screw or wood screw (do not use flat head screws).

Item Code	Item Name	Material	Finish	Weight	Carton
160-074-085	100-04-30	Zinc Alloy (ZDC)	Chrome	29 g	400 pcs

100-02A-30

*The finish has been changed. Please check with actual item.

Features

- Overlay adjustable.
- Standard height: 0 mm

Recommended Screw

Size 3.5 tapping screw or wood screw (do not use flat head screws).

Item Code	Item Name	Material	Finish/Colour	Weight	Carton
160-074-074	100-02A-30	Polyamide (PA)/Steel	Ivory/Yellow Zinc Chromate	17 g	400 pcs

SYSTEM 30 TYPE

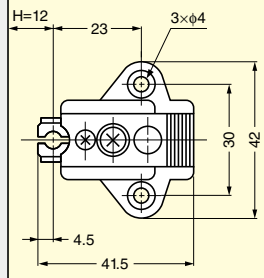

• 100-P4A-30 100-04A-30

Value of H: Door thickness + 17 mm in use of INSET type (Door thickness + 12 mm in use of INSET type of H160 or 170 hinge).

100-04A-30

*The finish has been changed. Please check with actual item.

Features

- Overlay adjustable.
- Standard height: 0 mm

Recommended Screw

Size 3.5 tapping screw or wood screw (do not use flat head screws).

Item Code	Item Name	Material	Finish	Weight	Carton
160-074-087	100-04A-30	Zinc Alloy (ZDC)/Steel	Chrome/Yellow Zinc Chromate	43 g	400 pcs

100-P4A-30

*The finish has been changed. Please check with actual item.

Features

- Overlay adjustable.
- Standard height: 0 mm

Recommended Screw

Size 3.5 tapping screw or wood screw (do not use flat head screws).

Item Code	Item Name	Material	Finish	Weight	Carton
160-074-161	100-P4A-30	Steel	Chrome/Yellow Zinc Chromate	27 g	400 pcs

MOUNTING PLATE 100 SERIES

SYSTEM 30 TYPE

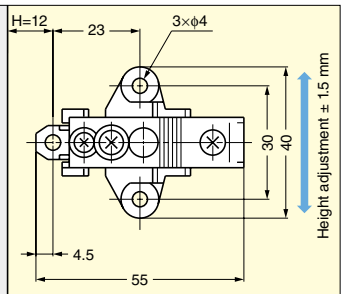

• 100-04W-30

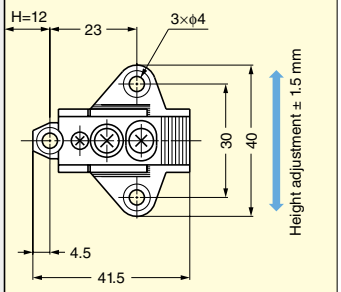

• 100-04A-W-30 100-04A-W-30-2

100-04W-30

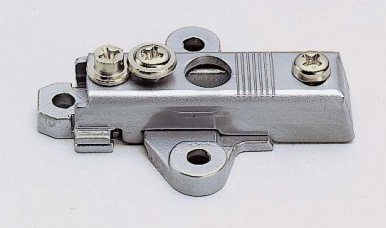

Features
- Height adjustable.
- Standard height: 0 mm

Recommended Screw

Size 3.5 tapping screw or wood screw (do not use flat head screws).

Item Code	Item Name	Material	Finish	Weight	Carton
160-074-095	100-04W-30	Zinc Alloy (ZDC)/Steel	Chrome	35 g	800 pcs

100-04A-W-30

*The finish has been changed. Please check with actual item.

Features
- Overlay and height adjustable.
- Standard height: 0 mm

Recommended Screw

Size 3.5 tapping screw or wood screw (do not use flat head screws).

Item Code	Item Name	Material	Finish	Weight	Carton
160-074-115	100-04A-W-30	Steel	Chrome/Yellow Zinc Chromate	32 g	800 pcs

100-04A-W-30-2

*The finish has been changed. Please check with actual item.

Features
- Overlay and height adjustable.
- Height: 2 mm

Recommended Screw

Size 3.5 tapping screw or wood screw (do not use flat head screws).

Item Code	Item Name	Material	Finish	Weight	Carton
160-074-158	100-04A-W-30-2	Zinc Alloy (ZDC)/Steel	Chrome/Yellow Zinc Chromate	35 g	800 pcs

SYSTEM 32 TYPE

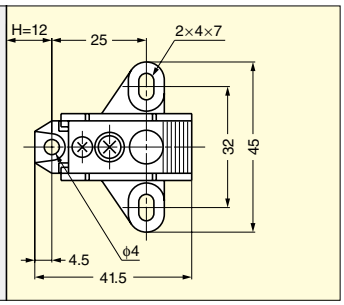

100-04A-32-3

*The finish has been changed. Please check with actual item.

Features
- Overlay adjustable.
- Standard height: 3 mm

Recommended Screw

Size 3.5 tapping screw or wood screw (do not use flat head screws).

Item Code	Item Name	Material	Finish	Weight	Carton
160-074-089	100-04A-32-3	Zinc Alloy (ZDC)/Steel	Chrome/Yellow Zinc Chromate	37 g	400 pcs

SYSTEM 32 TYPE

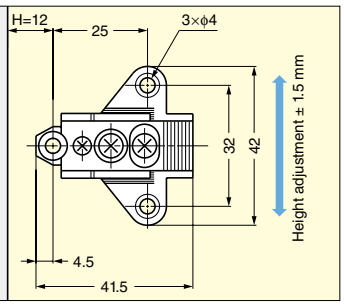

Value of H: Door thickness + 17 mm in use of INSET type (Door thickness + 12 mm in use of INSET type of H160 or 170 hinge).

100-04A-W-32

*The finish has been changed. Please check with actual item.

Features
- Overlay and height adjustable.
- Standard height: 0 mm

Recommended Screw

Size 3.5 tapping screw or wood screw (do not use flat head screws).

Item Code	Item Name	Material	Finish	Weight	Carton
160-074-116	100-04A-W-32	Steel	Chrome/Yellow Zinc Chromate	33 g	800 pcs

MOUNTING PLATE 100 SERIES

SYSTEM 32 TYPE

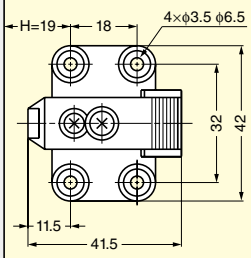

• 100-06

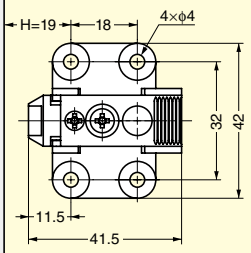

• 100-06A

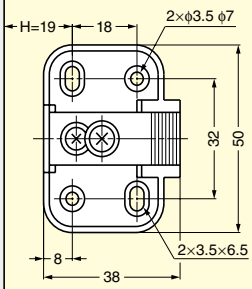

• 100-P6

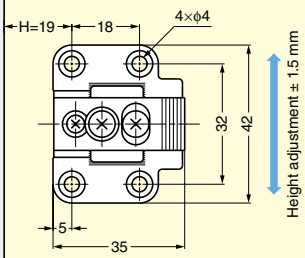

• 100-06AW

Value of H: Door thickness + 17 mm in use of INSET type (Door thickness + 12 mm in use of INSET type of H160 or 170 hinge).

100-06

Features

Standard height: 0 mm

Recommended Screw

Size 3.5 tapping screw or wood screw (do not use flat head screws).

Item Code	Item Name	Material	Finish	Weight	Carton
160-074-110	100-06	Zinc Alloy (ZDC)	Chrome	29 g	400 pcs

100-06A

Features

- Overlay adjustable.
- Standard height: 0 mm

Recommended Screw

Size 3.5 tapping screw or wood screw (do not use flat head screws).

*The finish has been changed. Please check with actual item.

Item Code	Item Name	Material	Finish	Weight	Carton
160-074-111	100-06A	Zinc Alloy (ZDC)/Steel	Chrome/Yellow Zinc Chromate	36 g	400 pcs

100-P6

Features

Standard height: 0 mm

Recommended Screw

Size 3.5 tapping screw or wood screw (do not use flat head screws).

Item Code	Item Name	Material	Finish	Weight	Carton
160-074-160	100-P6	Steel	Chrome	23 g	400 pcs

100-06AW

Features

- Overlay and height adjustable.
- Standard height: 0 mm

Recommended Screw

Size 3.5 tapping screw or wood screw (do not use flat head screws).

*The finish has been changed. Please check with actual item.

Item Code	Item Name	Material	Finish	Weight	Carton
160-074-171	100-06AW	Steel	Chrome/Yellow Zinc Chromate	37 g	400 pcs

SPACER FOR 100 SERIES MOUNTING PLATE

100-DP2

Features

Used to make overlay 2 mm smaller.

Use with the following mounting plates:

100-01 100-03
100-03A 100-P3A
100-P3A-SUS304B

Item Code	Item Name	Material	Colour	Weight	Box	Carton
160-074-100	100-DP2	Polyamide (PA)	Ivory	2 g	800 pcs	3200 pcs

100-DP2-30

Features

Used to make overlay 2 mm smaller.

Use with the following mounting plates:

100-02-30 100-02A-30
100-04-30 100-04A-30
100-04W-30 100-P4A-30
100-04A-W-30 100-04A-W-30-2
100-P4A-30-SUS304B

Item Code	Item Name	Material	Colour	Weight	Box	Carton
160-074-105	100-DP2-30	Polyamide (PA)	Ivory	2 g	800 pcs	3200 pcs

100-DP2-32

Features

Used to make overlay 2 mm smaller.

Use with the following mounting plates:

100-04A-32-3 100-04A-W-32
100-P4A-32-SUS304B

Item Code	Item Name	Material	Colour	Weight	Box	Carton
160-074-107	100-DP2-32	Polyamide (PA)	Ivory	2 g	800 pcs	3200 pcs

100-DP2-06

Features

Used to make overlay 2 mm smaller.

Use with the following mounting plates:

100-06 100-06AW
100-06A

Item Code	Item Name	Material	Colour	Weight	Box	Carton
160-074-145	100-DP2-06	Polyamide (PA)	Ivory	3 g	800 pcs	3200 pcs

JIG FOR 100 SERIES MOUNTING PLATE

JIG

Item Code	Item Name	Box	Carton
160-074-109	JIG-100	50 pcs	500 pcs

Cannot be used with the following mounting plates:

100-P3A 100-P4A-30 100-04W-30
100-06 100-06A 100-P6
100-06AW

(Cannot be used for inset type plates.)

Installation:

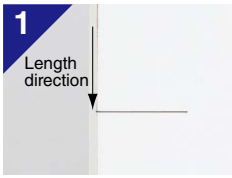

Draw a line where you want to install the mounting plate.

Use the jig to aligne the V shpe with the line.

Insert the mounting plate into the jig for correct installation position.

Hold the jig while fixing the mounting plate with a screw.

Other Examples:

Can also be used with mounting plates designed for System 30 and 32.

Mark the holes for easy installation.

Attach the jig to a bar when installing several mounting plates at the same time.

The bar will help you decide the correct distance between the plates.

RECOMMENDED NUMBER OF HINGES PER DOOR

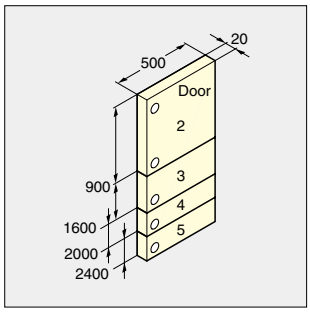

This chart can serve as a guide for determing the number of hinges per door.

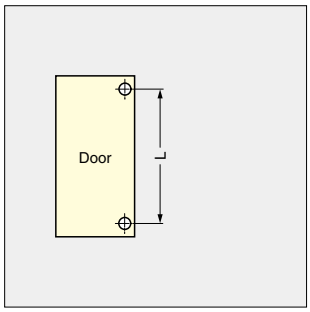

L: The distance between the top and bottom hinges must be greater than the width of the door.

CABINET DAMPER

DI-4000, DL-4000, DC-4000

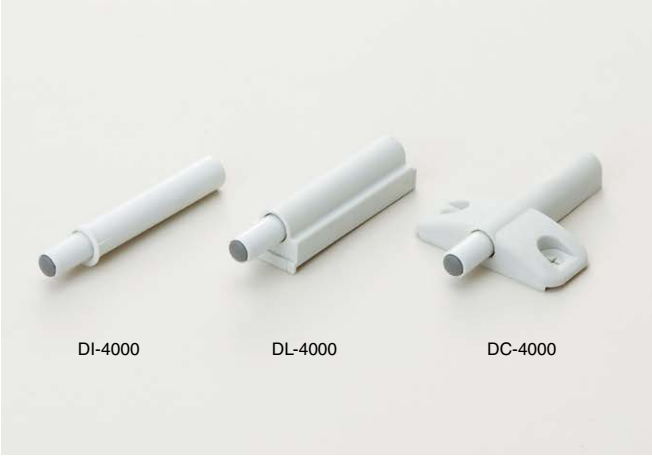

Features

- Damper for overlay swing door which absorbs the impact when closing.
- Top mounting type
- Please use it with concealed hinge with catch. (Refer to P.362 - 367 on INDEX)
- Recommended door size: W300 - 500×Max.: H800×t18 mm (3 - 5 kg)

Installation

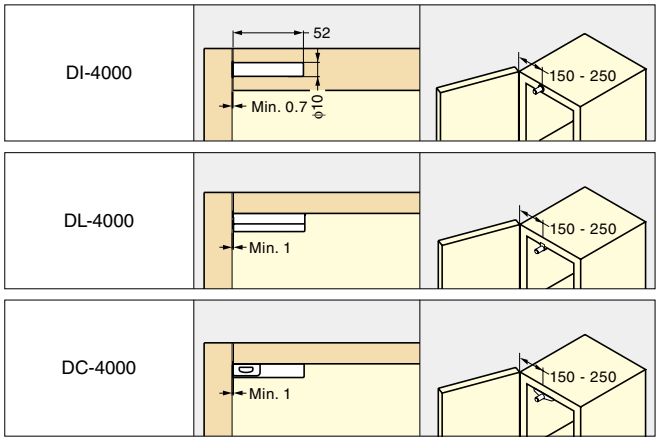

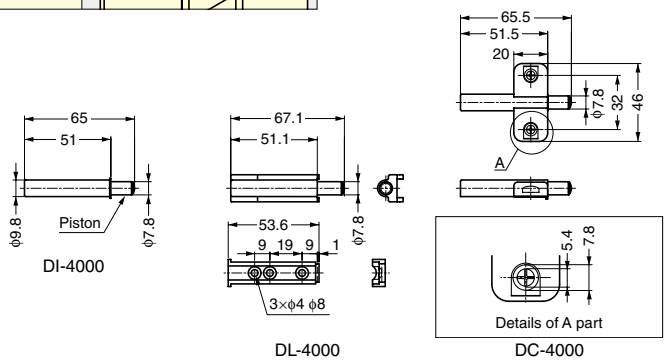

Item Code	Item Name	Material	Colour	Weight	Box	Carton
210-030-319	DI-4000	Polyamide (PA)	White	6 g	500 pcs	1000 pcs
210-030-320	DL-4000	Polyamide (PA)	White	12 g	250 pcs	500 pcs
210-030-318	DC-4000	Polyamide (PA)	White	9 g	250 pcs	500 pcs

CABINET DAMPER DSW

Features

- Enables soft-close for swing doors.
- For full overlay.

Installation

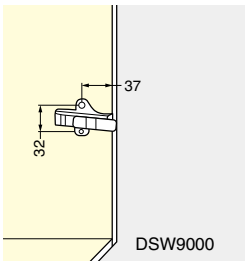

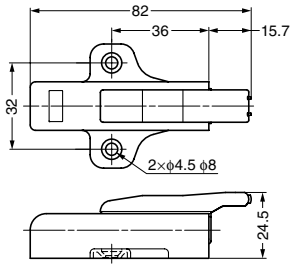

DSW9000

Item Code	Item Name	Material	Finish/Colour	Weight	Box
210-031-051	DSW9000	Zinc Alloy (ZDC)	Paint, Grey	49 g	200 pcs

CABINET DAMPER DS

Features

- Enables soft-close for swing doors.
- For full overlay.
- Can be used with ACC-DAM to support half overlay and inset type doors.

Options

Support plate ACC-DAM (Below)

Installation

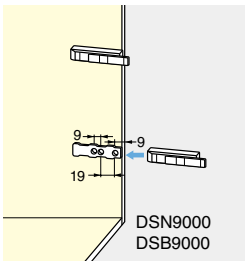

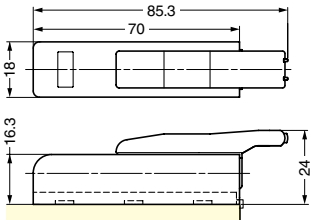

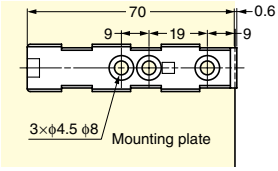

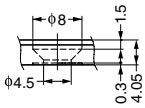

DSN9000, DSB9000

Item Code	Item Name	Material	Finish/Colour	Weight	Box
210-031-053	DSN9000	ABS	Paint, Grey	18 g	200 pcs
210-031-052	DSB9000	ABS	Black	20 g	200 pcs

Options

Support Plate ACC-DAM

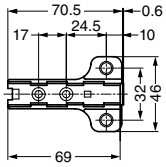

ACC-DAM40

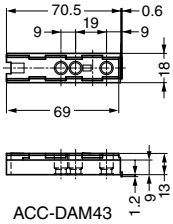

ACC-DAM43

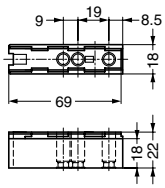

ACC-DAM44

Item Code	Item Name	Door Type	Material	Colour	Weight	Box
210-011-287	ACC-DAM40	Full Overlay	ABS	Silver	7 g	300 pcs
210-011-288	ACC-DAM43	Half Overlay	ABS	Silver	7 g	300 pcs
210-011-877	ACC-DAM43-BLACK	Half Overlay	ABS	Black	7 g	300 pcs
210-011-289	ACC-DAM44	Inset	ABS	Silver	10 g	200 pcs

BUTT HINGE

L=R

TTS-100 SERIES

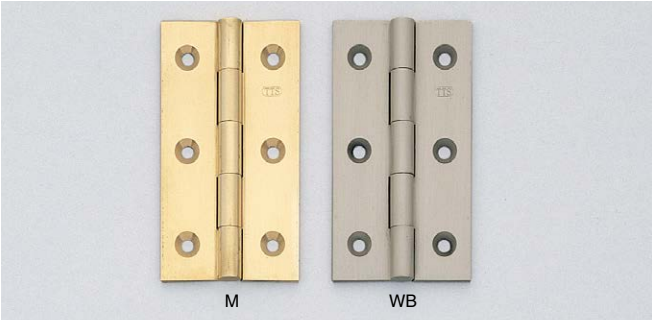

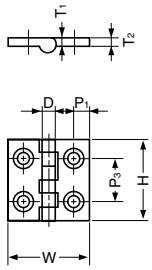

TTS-101 - 106

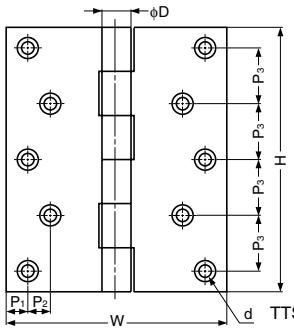

TTS-107 - 109

Item Code	Item Name	Finish	Material	H	W	T_1	T_2	D	P_1	P_2	P_3	d	Weight	Box
170-090-144	TTS-101M	Polished	Brass	25	27	2	1.8	4.5	5	–	14	4×φ3	11 g	100 pcs
170-090-130	TTS-101WB	Satin Nickel	Brass	25	27	2	1.8	4.5	5	–	14	4×φ3	11 g	100 pcs
170-090-145	TTS-102M	Polished	Brass	32	27	2	1.8	4.5	5	–	19	4×φ3	15 g	100 pcs
170-090-131	TTS-102WB	Satin Nickel	Brass	32	27	2	1.8	4.5	5	–	19	4×φ3	15 g	100 pcs
170-090-146	TTS-103M	Polished	Brass	38	27	2	1.8	4.5	5	–	13	6×φ3	20 g	100 pcs
170-090-132	TTS-103WB	Satin Nickel	Brass	38	27	2	1.8	4.5	5	–	13	6×φ3	20 g	100 pcs
170-090-147	TTS-104M	Polished	Brass	50	32	2.2	2.1	5.2	6	–	18	6×φ3.5	30 g	100 pcs
170-090-133	TTS-104WB	Satin Nickel	Brass	50	32	2.2	2.1	5.2	6	–	18	6×φ3.5	30 g	100 pcs
170-090-148	TTS-105M	Polished	Brass	65	38	2.4	2.3	6.1	7	–	25	6×φ3.6	54 g	50 pcs
170-090-134	TTS-105WB	Satin Nickel	Brass	65	38	2.4	2.3	6.1	7	–	25	6×φ3.6	54 g	50 pcs
170-090-149	TTS-106M	Polished	Brass	75	42	2.6	2.5	7.1	8	–	27	6×φ3.8	77 g	50 pcs
170-090-135	TTS-106WB	Satin Nickel	Brass	75	42	2.6	2.5	7.1	8	–	27	6×φ3.8	77 g	50 pcs
170-090-150	TTS-107M	Polished	Brass	90	56	3.2	2.8	8	7	5	24.6	8×φ4.1	146 g	10 pcs
170-090-136	TTS-107WB	Satin Nickel	Brass	90	56	3.2	2.8	8	7	5	24.6	8×φ4.1	146 g	10 pcs
170-090-151	TTS-108M	Polished	Brass	100	68	3.5	3	8.5	9	6	26	8×φ4.5	206 g	10 pcs
170-090-137	TTS-108WB	Satin Nickel	Brass	100	68	3.5	3	8.5	9	6	26	8×φ4.5	206 g	10 pcs
170-090-152	TTS-109M	Polished	Brass	125	82	4.2	3.7	10	10	10	26.3	10×φ5.1	370 g	10 pcs
170-090-138	TTS-109WB	Satin Nickel	Brass	125	82	4.2	3.7	10	10	10	26.3	10×φ5.1	370 g	10 pcs

BUTT HINGE

L=R

TTS-800 SERIES

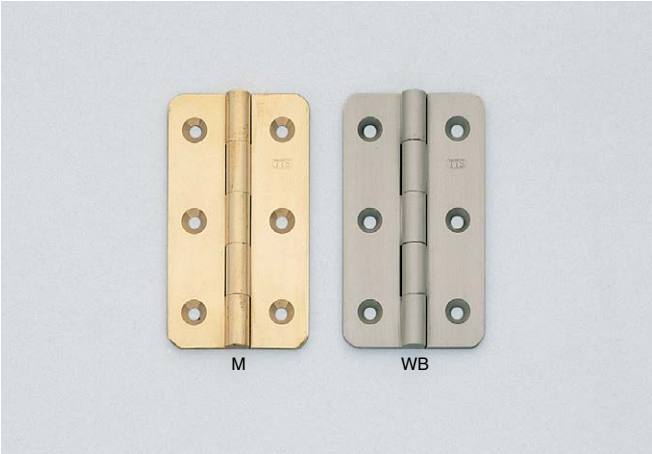

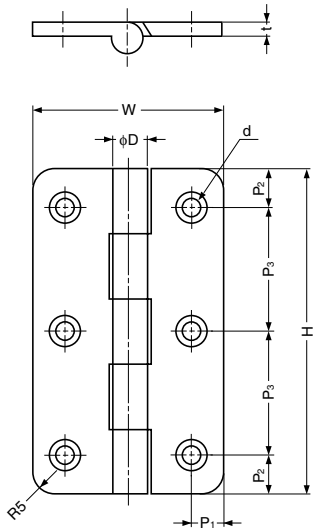

Item Code	Item Name	Finish	Material	H	W	t	D	P_1	P_2	P_3	d	Weight	Box
170-090-174	TTS-801M	Polished	Brass	38	27	1.9	4.5	5	6	13	6×φ3	17 g	100 pcs
170-090-170	TTS-801WB	Satin Nickel	Brass	38	27	1.9	4.5	5	6	13	6×φ3	17 g	100 pcs
170-090-175	TTS-802M	Polished	Brass	50	32	2.3	5.2	6	7	18	6×φ3.5	31 g	100 pcs
170-090-171	TTS-802WB	Satin Nickel	Brass	50	32	2.3	5.2	6	7	18	6×φ3.5	31 g	100 pcs
170-090-176	TTS-803M	Polished	Brass	65	38	2.5	6.1	7	7.5	25	6×φ3.6	54 g	50 pcs
170-090-172	TTS-803WB	Satin Nickel	Brass	65	38	2.5	6.1	7	7.5	25	6×φ3.6	54 g	50 pcs
170-090-177	TTS-804M	Polished	Brass	75	42	2.6	7.1	8	10.5	27	6×φ3.8	77 g	50 pcs
170-090-173	TTS-804WB	Satin Nickel	Brass	75	42	2.6	7.1	8	10.5	27	6×φ3.8	77 g	50 pcs

LIFT-OFF HINGE

STEEL

TTS-200 SERIES

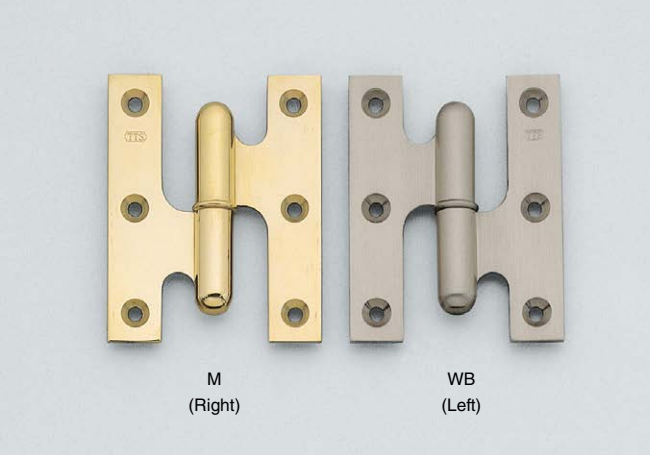

Parts Included

Countersunk head wood screw (Not provided for TTS-201 - TTS-203)

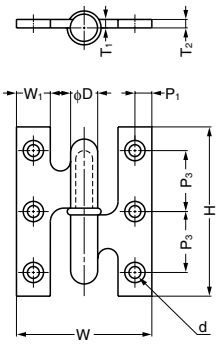

TTS-201 L/R - 203 L/R

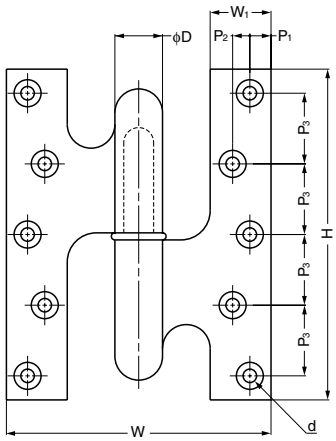

Item Code	Item Name	Type	Material	Finish	Screw	H	W	W_1	T_1	T_2	D	P_1	P_2	P_3	d	Weight	Box
170-090-230	TTS-201MR	Right	Brass	Polished	–	50	40	10	2.5	2.5	8	5	–	18	6×ϕ3.5	37 g	20 pcs
170-090-231	TTS-201ML	Left	Brass	Polished	–	50	40	10	2.5	2.5	8	5	–	18	6×ϕ3.5	37 g	20 pcs
170-090-220	TTS-201WBR	Right	Brass	Satin Nickel	–	50	40	10	2.5	2.5	8	5	–	18	6×ϕ3.5	37 g	20 pcs
170-090-221	TTS-201WBL	Left	Brass	Satin Nickel	–	50	40	10	2.5	2.5	8	5	–	18	6×ϕ3.5	37 g	20 pcs
170-090-232	TTS-202MR	Right	Brass	Polished	–	65	50	13	2.8	2.8	10	6.5	–	25	6×ϕ3.8	73 g	20 pcs
170-090-233	TTS-202ML	Left	Brass	Polished	–	65	50	13	2.8	2.8	10	6.5	–	25	6×ϕ3.8	73 g	20 pcs
170-090-222	TTS-202WBR	Right	Brass	Satin Nickel	–	65	50	13	2.8	2.8	10	6.5	–	25	6×ϕ3.8	73 g	20 pcs
170-090-223	TTS-202WBL	Left	Brass	Satin Nickel	–	65	50	13	2.8	2.8	10	6.5	–	25	6×ϕ3.8	73 g	20 pcs
170-090-234	TTS-203MR	Right	Brass	Polished	–	75	60	15	3	3	11	7.5	–	29.5	6×ϕ4.1	106 g	10 pcs
170-090-235	TTS-203ML	Left	Brass	Polished	–	75	60	15	3	3	11	7.5	–	29.5	6×ϕ4.1	106 g	10 pcs
170-090-224	TTS-203WBR	Right	Brass	Satin Nickel	–	75	60	15	3	3	11	7.5	–	29.5	6×ϕ4.1	106 g	10 pcs
170-090-225	TTS-203WBL	Left	Brass	Satin Nickel	–	75	60	15	3	3	11	7.5	–	29.5	6×ϕ4.1	106 g	10 pcs
170-090-236	TTS-204MR	Right	Brass	Polished	4.1×25	100	75	19	4.5	4	15	7	4	28.3	8×ϕ4.5	260 g	6 pcs
170-090-237	TTS-204ML	Left	Brass	Polished	4.1×25	100	75	19	4.5	4	15	7	4	28.3	8×ϕ4.5	260 g	6 pcs
170-090-226	TTS-204WBR	Right	Brass	Satin Nickel	4.1×25	100	75	19	4.5	4	15	7	4	28.3	8×ϕ4.5	260 g	6 pcs
170-090-227	TTS-204WBL	Left	Brass	Satin Nickel	4.1×25	100	75	19	4.5	4	15	7	4	28.3	8×ϕ4.5	260 g	6 pcs
170-090-238	TTS-205MR	Right	Brass	Polished	4.5×30	125	100	23.5	5	4.5	18	8	7	26.75	10×ϕ5.1	480 g	6 pcs
170-090-239	TTS-205ML	Left	Brass	Polished	4.5×30	125	100	23.5	5	4.5	18	8	7	26.75	10×ϕ5.1	480 g	6 pcs
170-090-228	TTS-205WBR	Right	Brass	Satin Nickel	4.5×30	125	100	23.5	5	4.5	18	8	7	26.75	10×ϕ5.1	480 g	6 pcs
170-090-229	TTS-205WBL	Left	Brass	Satin Nickel	4.5×30	125	100	23.5	5	4.5	18	8	7	26.75	10×ϕ5.1	480 g	6 pcs

BUTT HINGE

L=R STAINLESS 316 STEEL

27900, 27800

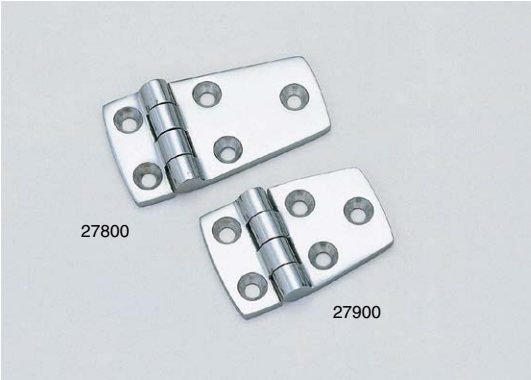

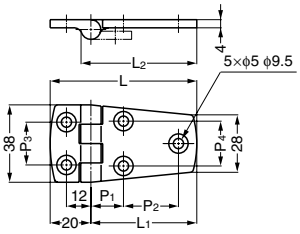

Features

Ideal for exterior application.

Remarks

Recommended for use in pairs.

Item Code	Item Name	Material	Finish	L	L_1	L_2	P_1	P_2	P_3	P_4	Door Width	Door Height	Door Thickness	Door Weight	Weight	Box	Carton
170-096-008	27900	Stainless Steel (SCS14)	Mirror	58	38	42	13.5	16.5	21	20	Max. 450	Max. 700	Max. 21	Max. 4 kg/2 pcs	70 g	20 pcs	100 pcs
170-096-007	27800	Stainless Steel (SCS14)	Mirror	72	52	57	16	27	22	21	Max. 450	Max. 700	Max. 21	Max. 4 kg/2 pcs	85 g	20 pcs	100 pcs

*SCS14 is equivalent of SUS316.

BUTT HINGE

L=R STAINLESS 316 STEEL

28100

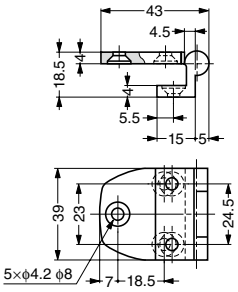

Features

Ideal for exterior application.

Remarks

Recommended for use in pairs.

Item Code	Item Name	Material	Finish	Door Width	Door Height	Door Thickness	Door Weight	Weight	Box	Carton
170-096-006	28100	Stainless Steel (SCS14)	Mirror	Max. 450	Max. 700	Max. 21	Max. 4 kg/2 pcs	83 g	20 pcs	100 pcs

*SCS14 is equivalent of SUS316.

BUTT HINGE

L=R STAINLESS 316 STEEL

28500, 28000

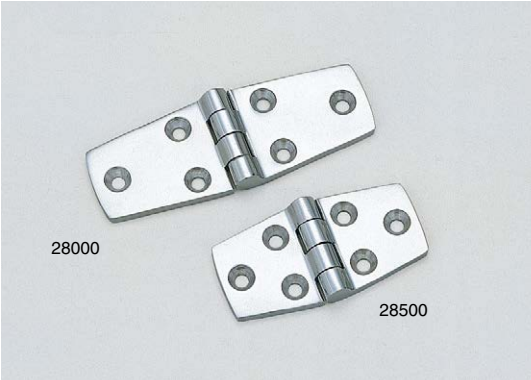

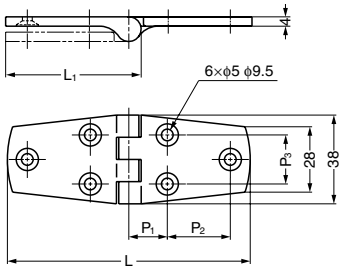

Features

Ideal for exterior application.

Remarks

Recommended for use in pairs.

Item Code	Item Name	Material	Finish	L	L_1	P_1	P_2	P_3	Door Width	Door Height	Door Thickness	Door Weight	Weight	Box	Carton
170-096-002	28500	Stainless Steel (SCS14)	Mirror	74	42	13	17	20	Max. 450	Max. 700	Max. 21	Max. 4 kg/2 pcs	86 g	20 pcs	100 pcs
170-096-003	28000	Stainless Steel (SCS14)	Mirror	104	57	16.5	27	21	Max. 450	Max. 700	Max. 21	Max. 4 kg/2 pcs	115 g	20 pcs	100 pcs

*SCS14 is equivalent of SUS316.

BUTT HINGE

L=R STAINLESS 316 STEEL

28300, 28400

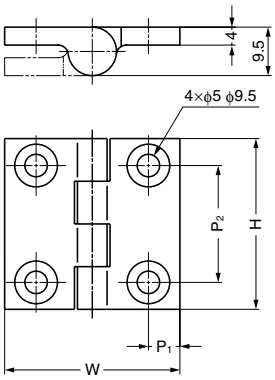

Features

Ideal for exterior application.

Remarks

Recommended for use in pairs.

Item Code	Item Name	Material	Finish	H	W	P_1	P_2	Door Width	Door Height	Door Thickness	Door Weight	Weight	Box	Carton
170-096-004	28300	Stainless Steel (SCS14)	Mirror	38	39	7	26	Max. 450	Max. 700	Max. 21	Max. 4 kg/2 pcs	55 g	20 pcs	100 pcs
170-096-005	28400	Stainless Steel (SCS14)	Mirror	50	50	7.5	34	Max. 450	Max. 700	Max. 21	Max. 4 kg/2 pcs	90 g	20 pcs	100 pcs

*SCS14 is equivalent of SUS316.

BUTT HINGE

L=R STAINLESS 316 STEEL

LSF

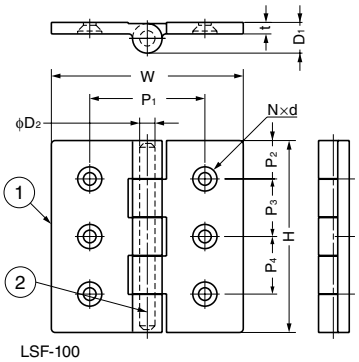

Features

Ideal for exterior application.

No.	Part Name	Material	Finish
①	Body	Stainless Steel (SCS14)	Mirror
②	Shaft	Stainless Steel (SUS316)	–

*SCS14 is equivalent of SUS316.

Item Code	Item Name	H	W	P_1	P_2	P_3	P_4	t	D_1	D_2	Knuckles	N	d	Door Weight	Weight	Box	Carton
170-090-720	LSF- 50	50	50	35	15	20	–	5	14	6	3	4	Counterbore for M4	Max. 35 kg/2 pcs	125 g	20 pcs	100 pcs
170-090-721	LSF- 65	65	65	40	15	35	–	5	14	6	3	4	Counterbore for M5	Max. 45 kg/2 pcs	180 g	20 pcs	80 pcs
170-090-722	LSF- 75	75	75	50	17.5	40	–	6	16	8	3	4	Counterbore for M6	Max. 65 kg/2 pcs	297 g	10 pcs	50 pcs
170-090-723	LSF-100	100	100	60	20	30	30	6	16	8	5	6	Counterbore for M6	Max. 85 kg/2 pcs	483 g	10 pcs	30 pcs

BUTT HINGE

L=R STAINLESS 304 STEEL

HG-BF1

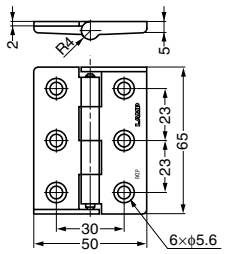

Features

Rim on edges prevents pin from falling off and limits angle.

Item Code	Item Name	Material	Finish	Weight	Box	Carton
170-091-560	HG-BF1	Stainless Steel (SUS304)	Polished	63 g	20 pcs	120 pcs

BUTT HINGE

L=R STAINLESS 304 STEEL

LSB

Features

No-hole type is also available at surcharge.

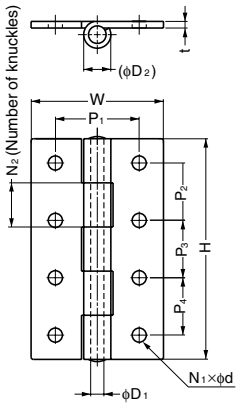

Item Code	Item Name	Material	Finish	H	W	P_1	P_2	P_3	P_4	t	d	D_1	D_2	N_1	N_2	Door Weight	Weight	Box	Carton
170-090-724	LSB- 40	Stainless Steel (SUS304)	Mirror	40	35	22	26	–	–	1.5	3.2	3	6.3	4	3	Max. 6 kg/2 pcs	25 g	100 pcs	400 pcs
170-090-725	LSB- 50	Stainless Steel (SUS304)	Mirror	50	35	22	34	–	–	1.5	4.3	3	6.3	4	3	Max. 8 kg/2 pcs	30 g	100 pcs	400 pcs
170-090-716	LSB- 65	Stainless Steel (SUS304)	Mirror	65	50	30	23	23	–	2	4.3	4.5	8.8	6	5	Max. 13 kg/2 pcs	71 g	50 pcs	200 pcs
170-090-717	LSB- 75	Stainless Steel (SUS304)	Mirror	75	50	30	27	27	–	2	5.3	4.5	8.8	6	5	Max. 15 kg/2 pcs	82 g	40 pcs	160 pcs
170-090-728	LSB- 90	Stainless Steel (SUS304)	Mirror	90	60	38	35	35	–	3	6.4	6	12.3	6	5	Max. 25 kg/2 pcs	180 g	10 pcs	80 pcs
170-090-729	LSB-100	Stainless Steel (SUS304)	Mirror	100	60	38	26	26	26	3	6.4	6	12.3	8	5	Max. 30 kg/2 pcs	202 g	10 pcs	60 pcs

BUTT HINGE

L=R STAINLESS 304 STEEL

KHA

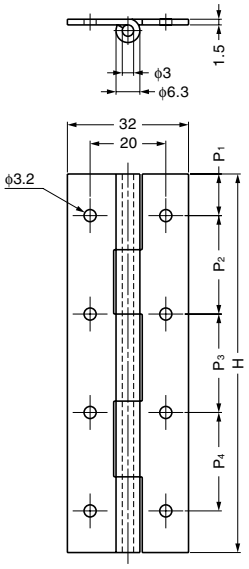

Item Code	Old Item Code	Item Name	Material	Finish	H	P_1	P_2	P_3	P_4	Knuckles	Door Weight	Weight	Box	Carton
170-091-180	–	KHA- 25C	Stainless Steel (SUS304)	Polished	25	6	13	–	–	3	Max. 3 kg/2 pcs	13 g	200 pcs	800 pcs
170-091-181	–	KHA- 30C	Stainless Steel (SUS304)	Polished	30	7	16	–	–	3	Max. 4 kg/2 pcs	16 g	200 pcs	800 pcs
170-091-182	–	KHA- 40C	Stainless Steel (SUS304)	Polished	40	8	24	–	–	3	Max. 6 kg/2 pcs	21 g	150 pcs	600 pcs
170-091-183	170-091-199	KHA- 50C	Stainless Steel (SUS304)	Polished	50	10	30	–	–	3	Max. 7 kg/2 pcs	26 g	100 pcs	400 pcs
170-091-184	170-091-200	KHA- 60C	Stainless Steel (SUS304)	Polished	60	8	22	22	–	5	Max. 9 kg/2 pcs	31 g	100 pcs	400 pcs
170-091-185	170-091-201	KHA- 65C	Stainless Steel (SUS304)	Polished	65	8.5	24	24	–	5	Max. 10 kg/2 pcs	34 g	100 pcs	400 pcs
170-091-186	170-091-202	KHA- 75C	Stainless Steel (SUS304)	Polished	75	9.5	28	28	–	5	Max. 11 kg/2 pcs	39 g	50 pcs	200 pcs
170-091-203	–	KHA- 80C	Stainless Steel (SUS304)	Polished	80	10	30	30	–	5	Max. 12 kg/2 pcs	42 g	50 pcs	200 pcs
170-091-204	–	KHA- 90C	Stainless Steel (SUS304)	Polished	90	10	35	35	–	5	Max. 13 kg/2 pcs	47 g	50 pcs	200 pcs
170-091-189	170-091-205	KHA-100C	Stainless Steel (SUS304)	Polished	100	11	26	26	26	5	Max. 15 kg/2 pcs	52 g	50 pcs	200 pcs

*The Item Code have been revised.

LIFT-OFF HINGE

STAINLESS 304 STEEL

NH-40

Left type shown.

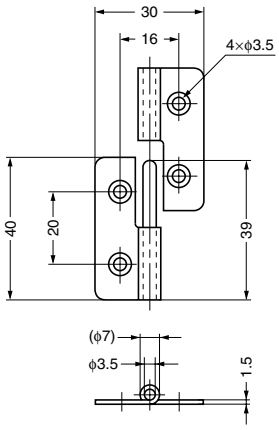

Right type shown.

Item Code	Item Name	Type	Material	Finish	Door Weight	Weight	Box	Carton
170-090-339	NH-40CL	Left	Stainless Steel (SUS304)	Polished	Max. 7 kg/2 pcs	21 g	150 pcs	600 pcs
170-090-337	NH-40CR	Right	Stainless Steel (SUS304)	Polished	Max. 7 kg/2 pcs	21 g	150 pcs	600 pcs

LIFT-OFF HINGE

STAINLESS 304 STEEL

KN

Right type shown.

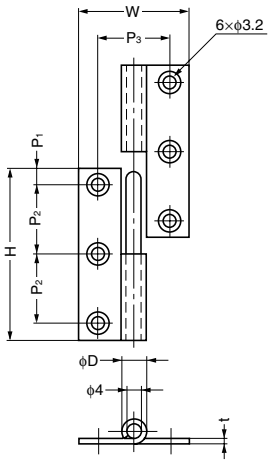

Right type shown.

Item Code	Item Name	Type	Material	Finish	H	W	P_1	P_2	P_3	D	t	Door Weight	Weight	Box	Carton
170-090-742	KN-50CL	Left	Stainless Steel (SUS304)	Mirror	50	32	5	20	21	7.5	1.5	Max. 7 kg/2 pcs	28 g	100 pcs	400 pcs
170-090-743	KN-50CR	Right	Stainless Steel (SUS304)	Mirror	50	32	5	20	21	7.5	1.5	Max. 7 kg/2 pcs	28 g	100 pcs	400 pcs
170-090-744	KN-64CL	Left	Stainless Steel (SUS304)	Mirror	64	36	8	24	24	7.5	1.5	Max. 10 kg/2 pcs	38 g	100 pcs	400 pcs
170-090-745	KN-64CR	Right	Stainless Steel (SUS304)	Mirror	64	36	8	24	24	7.5	1.5	Max. 10 kg/2 pcs	38 g	100 pcs	400 pcs
170-090-746	KN-75CL	Left	Stainless Steel (SUS304)	Mirror	75	38	7.5	30	24	8.5	2	Max. 15 kg/2 pcs	60 g	50 pcs	200 pcs
170-090-747	KN-75CR	Right	Stainless Steel (SUS304)	Mirror	75	38	7.5	30	24	8.5	2	Max. 15 kg/2 pcs	60 g	50 pcs	200 pcs

BUTT HINGE (W/ SPRING)

L=R STAINLESS 304 STEEL

HG-SH

Features

- Made entirely out of stainless steel, high corrosion resistance
- Designed to exert constant closing force on flap doors and doors

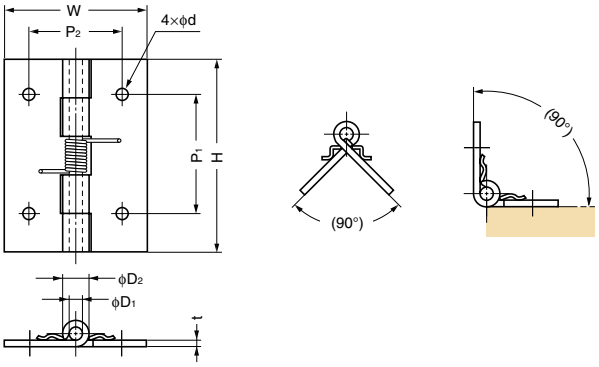

Item Code	Item Name	Material	Finish	H	W	P_1	P_2	D_1	D_2	d	t	Torque Moment		Door Weight	Weight	Box	Carton
170-098-515	HG-SH-20C	Stainless Steel (SUS304)	Mirror	20	14	–	–	1	2.2	–	0.5	9.7 cN·m	0.99 kgf·cm	Max. 1 kg/2 pcs	1.5 g	800 pcs	3200 pcs
170-098-516	HG-SH-25C	Stainless Steel (SUS304)	Mirror	25	32	14	20	3	5.8	3.2	1.2	6.5 cN·m	0.66 kgf·cm	Max. 2 kg/2 pcs	10 g	300 pcs	1200 pcs
170-098-517	HG-SH-38C	Stainless Steel (SUS304)	Mirror	38	32	26	20	3	6.5	3.2	1.5	14.7 cN·m	1.5 kgf·cm	Max. 4 kg/2 pcs	20 g	200 pcs	800 pcs
170-098-522	HG-SH-51C	Stainless Steel (SUS304)	Mirror	51	38	32	25	3	6.5	3.2	1.5	13.5 cN·m	1.38 kgf·cm	Max. 6 kg/2 pcs	30 g	130 pcs	520 pcs

HIGH DURABILITY SPRING HINGE

L=R STAINLESS 304 STEEL

HG-SHL

Features

- Made entirely out of stainless steel, high corrosion resistance
- Passed 1,000,000 open/close cycles in a private test
- Designed to exert constant closing force on flap doors and doors

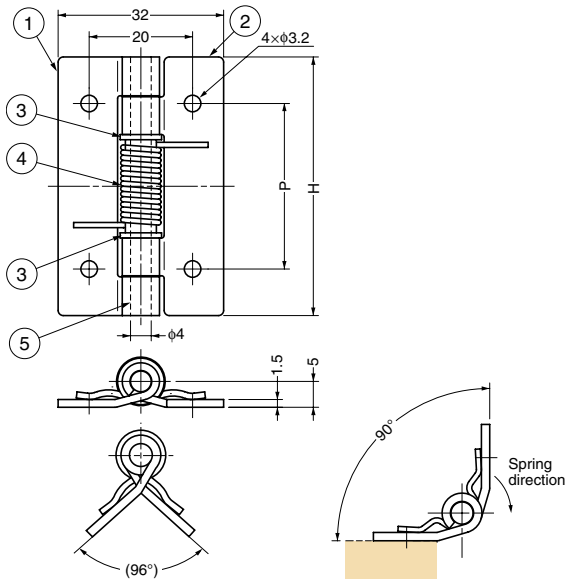

No.	Part Name	Material	Finish
①	Body 1	Stainless Steel (SUS304)	Mirror
②	Body 2	Stainless Steel (SUS304)	Mirror
③	Collar	Stainless Steel (SUS303)	-
④	Spring	Stainless Steel (SUS304)	-
⑤	Shaft	Stainless Steel (SUS303)	-

Item Code	Item Name	H	P	Torque Moment		Weight	Box	Carton
170-024-384	HG-SHL32	32	18	4.7 cN·m	0.48 kgf·cm	20 g	50 pcs	500 pcs
170-024-385	HG-SHL50	50	32	8.9 cN·m	0.91 kgf·cm	30 g	50 pcs	500 pcs
170-024-386	HG-SHL60	60	40	14.0 cN·m	1.43 kgf·cm	38 g	50 pcs	500 pcs

BUTT HINGE (W/ SPRING)

STAINLESS 304 STEEL

HG-BF3-2

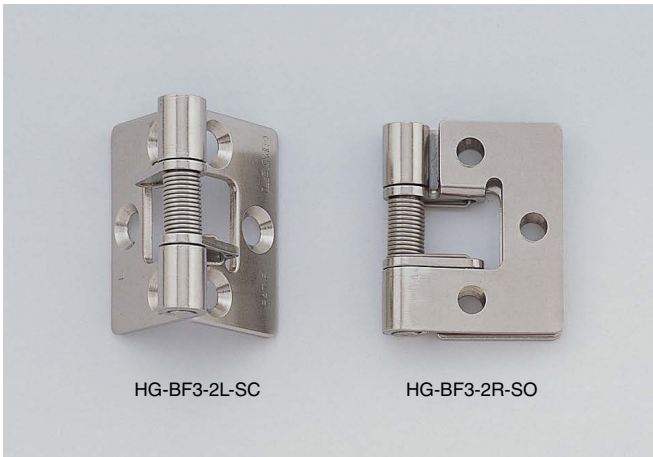

Features

- Spring hinge to hold door.
- Available with either opening or closing spring tension.

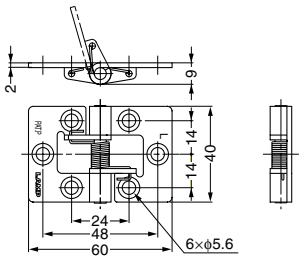

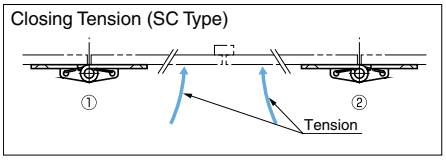

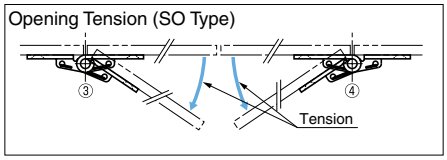

*①, ③ "L"
②, ④ "R"

Item Code	Item Name	No.	Type	Material	Finish	Weight	Box	Carton
170-091-562	HG-BF3-2L-SC	①	Closing Tension/Left	Stainless Steel (SUS304)	Polished	41 g	20 pcs	120 pcs
170-091-564	HG-BF3-2R-SC	②	Closing Tension/Right	Stainless Steel (SUS304)	Polished	41 g	20 pcs	120 pcs
170-091-561	HG-BF3-2L-SO	③	Opening Tension/Left	Stainless Steel (SUS304)	Polished	41 g	20 pcs	120 pcs
170-091-563	HG-BF3-2R-SO	④	Opening Tension/Right	Stainless Steel (SUS304)	Polished	41 g	20 pcs	120 pcs

DOUBLE ACTION HINGE

L=R STAINLESS 304 STEEL

HG-BH

Features

Opens 180˚ in both left and right direction.

Remarks

Recommended for use in pairs.

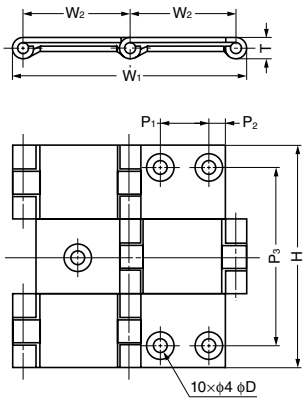

Application Example

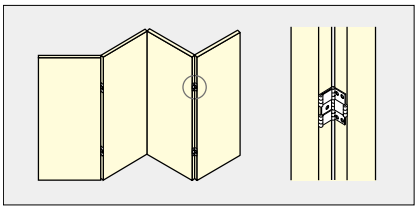

Item Code	Item Name	Material	Finish	H	W_2	W_1	T	P_3	P_2	P_1	D	Door Width	Door Height	Door Weight	Weight	Box	Carton
170-090-065	HG-BH60	Stainless Steel (SUS304)	Satin	60	29	64	5.5	47	4.8	13.5	6.5	Max. 450	Max. 700	Max. 2.6 kg/2 pcs	65g	20 pcs	260 pcs
170-090-066	HG-BH70	Stainless Steel (SUS304)	Satin	70	35	78	7.5	57	6.8	13.5	7	Max. 450	Max. 700	Max. 2.6 kg/2 pcs	130g	10 pcs	180 pcs
170-090-067	HG-BH80	Stainless Steel (SUS304)	Satin	80	43.2	94	7.5	66	6.5	22	7	Max. 450	Max. 700	Max. 2.6 kg/2 pcs	175g	10 pcs	120 pcs

INSET DOOR PIVOT HINGE

STAINLESS 430 STEEL

PP-60

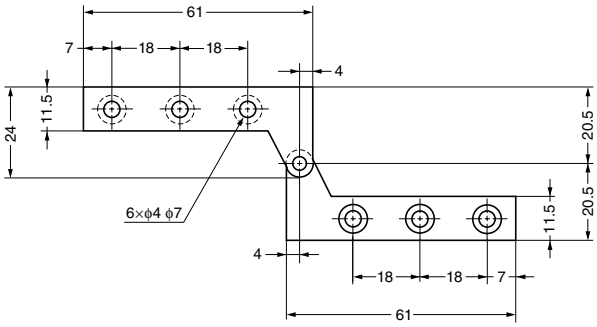

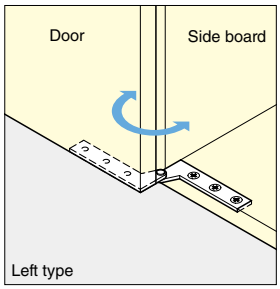

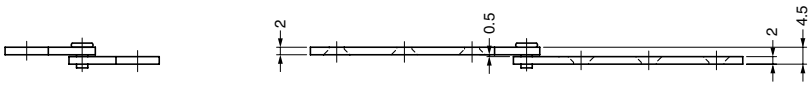

Right type shown.

Item Code	Item Name	Type	Material	Finish	Door Width	Door Height	Door Weight	Weight	Box	Carton
170-090-261	PP-60R	Right (for right-lower / left-upper)	Stainless Steel (SUS430)	Plain	Max. 450	Max. 700	Max. 4 kg	22 g	100 pcs	1000 pcs
170-090-262	PP-60L	Left (for left-lower / right-upper)	Stainless Steel (SUS430)	Plain	Max. 450	Max. 700	/pair	22 g	100 pcs	1000 pcs

OVERLAY DOOR PIVOT HINGE

STAINLESS 430 STEEL

WP1, WP3

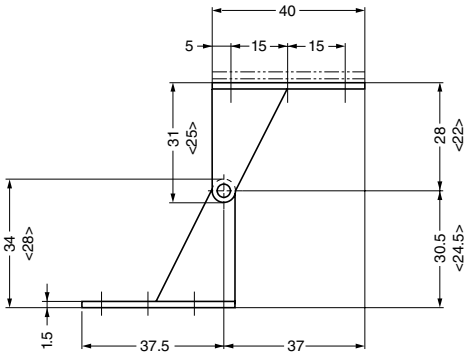

< > shows WP3.

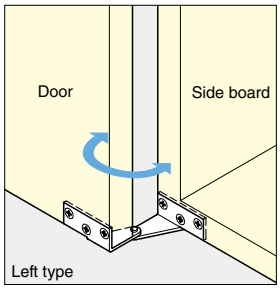

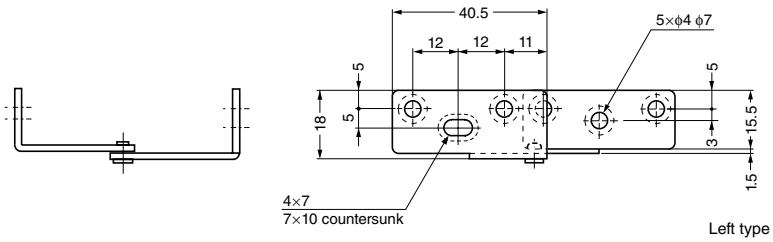

Left type shown.

Item Code	Item Name	Type	Material	Finish	Door Width	Door Height	Door Thickness	Door Weight	Weight	Box	Carton
170-090-257	WP1R	Right (for right-lower / left-upper)	Stainless Steel (SUS430)	Plain	Max. 300	Max. 700	Max. 24	Max. 2.7 kg	23 g	100 pcs	1000 pcs
170-090-258	WP1L	Left (for left-lower / right-upper)	Stainless Steel (SUS430)	Plain	Max. 300	Max. 700	Max. 24	/pair	23 g	100 pcs	1000 pcs
170-090-259	WP3R	Right (for right-lower / left-upper)	Stainless Steel (SUS430)	Plain	Max. 300	Max. 700	Max. 18	Max. 2.7 kg	21 g	100 pcs	1000 pcs
170-090-260	WP3L	Left (for left-lower / right-upper)	Stainless Steel (SUS430)	Plain	Max. 300	Max. 700	Max. 18	/pair	21 g	100 pcs	1000 pcs

OVERLAY DOOR PIVOT HINGE

STAINLESS 430 STEEL

PL-60

Left (for left-lower / right-upper)

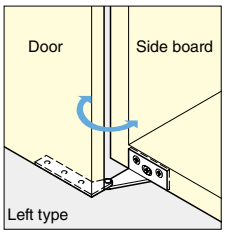

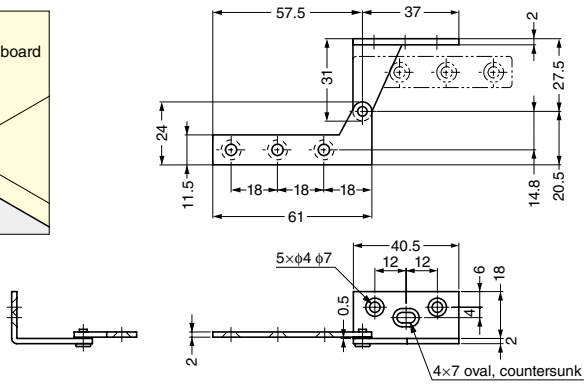

Left type shown.

Item Code	Item Name	Type	Material	Finish	Door Width	Door Height	Door Thickness	Door Weight	Weight	Box	Carton
170-090-263	PL-60R	Right (for right-lower / left-upper)	Stainless Steel (SUS430)	Plain	Max. 450	Max. 700	22	Max. 4 kg	27 g	100 pcs	1000 pcs
170-090-264	PL-60L	Left (for left-lower / right-upper)	Stainless Steel (SUS430)	Plain	Max. 450	Max. 700	22	/pair	27 g	100 pcs	1000 pcs

OVERLAY DOOR PIVOT HINGE

STAINLESS 430 STEEL

PL-65

Left (for left-lower / right-upper)

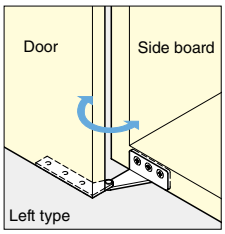

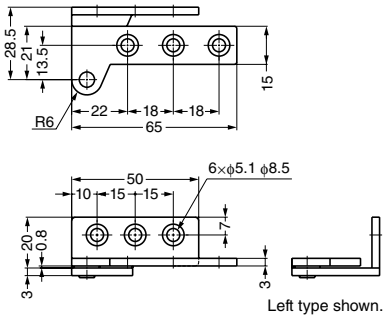

Left type shown.

Item Code	Item Name	Type	Material	Finish	Door Width	Door Height	Door Thickness	Door Weight	Weight	Box	Carton
170-099-190	PL-65R	Right (for right-lower / left-upper)	Stainless Steel (SUS430)	Plain	Max. 450	Max. 700	22	Max. 4 kg	55 g	40 pcs	400 pcs
170-099-191	PL-65L	Left (for left-lower / right-upper)	Stainless Steel (SUS430)	Plain	Max. 450	Max. 700	22	/pair	55 g	40 pcs	400 pcs

OVERLAY DOOR PIVOT HINGE

STAINLESS 304 STEEL

PL-100

Right (for right-lower / left-upper)

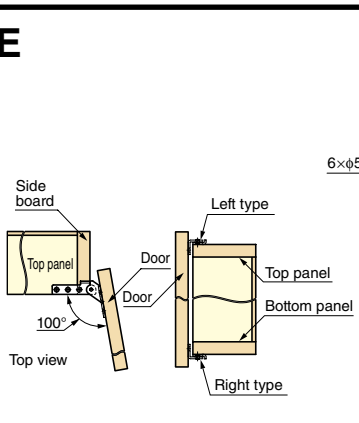

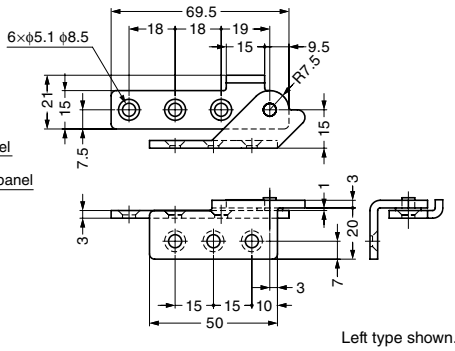

Left type shown.

Item Code	Item Name	Type	Material	Finish	Door Width	Door Height	Door Weight	Weight	Box	Carton
170-099-379	PL-100R	Right (for right-lower / left-upper)	Stainless Steel (SUS304)	Polished	Max. 600	Max. 750	Max. 6 kg	55 g	70 pcs	420 pcs
170-099-380	PL-100L	Left (for left-lower / right-upper)	Stainless Steel (SUS304)	Polished	Max. 600	Max. 750	/pair	55 g	70 pcs	420 pcs

OVERLAY DOOR PIVOT HINGE

STAINLESS

PAS

Left (for left-lower / right-upper)

Remarks

Sold in pairs.

Parts Included

- Countersunk head wood screw 3.1×20 (SUS) (PAS-50, 60)
- Countersunk head wood screw 3.8×25 (SUS) (PAS-80, 90)

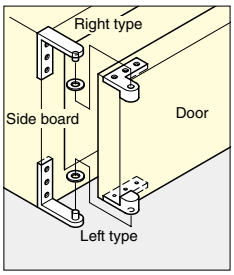

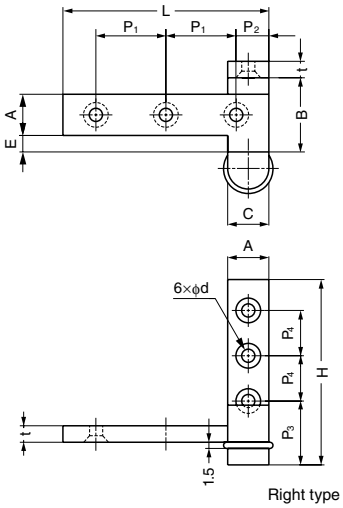

Right type shown.

Item Code	Item Name	Material	Finish	L	t	H	A	B	C	E	P_1	P_2	P_3	P_4	d	Door				Weight	Box	Carton
																Width	Height	Thickness	Weight			
170-090-981	PAS-50	Brass	Satin Nickel	50	4	45	10	22	10	4	17	8	15.5	11	3.2	Max. 450	Max. 700	21	Max. 2.6 kg/pair	104 g	10 pairs	200 pairs
170-090-977	PAS-60	Brass	Satin Nickel	60	4.5	50	12	22	12	4	21	9	16	13.5	3.2	Max. 450	Max. 700	21	Max. 2.6 kg/pair	141 g	10 pairs	200 pairs
170-090-982	PAS-80	Brass	Satin Nickel	80	6	70	16	26.5	15	4	30	10	24	19	4.2	Max. 450	Max. 700	25	Max. 4 kg/pair	348 g	8 pairs	32 pairs
170-090-983	PAS-95	Brass	Satin Nickel	95	6.5	80	19	31.5	16	9	35	12.5	26	22	4.2	Max. 450	Max. 700	30	Max. 4 kg/pair	497 g	6 pairs	24 pairs

INSET DOOR PIVOT HINGE

STAINLESS

PAW

Left (for left-lower / right-upper)

Remarks

Sold in pairs.

Parts Included

- Countersunk head wood screw 3.1×20 (SUS) (PAW-50, 60)
- Countersunk head wood screw 3.8×25 (SUS) (PAW-80, 95)

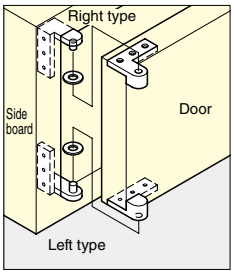

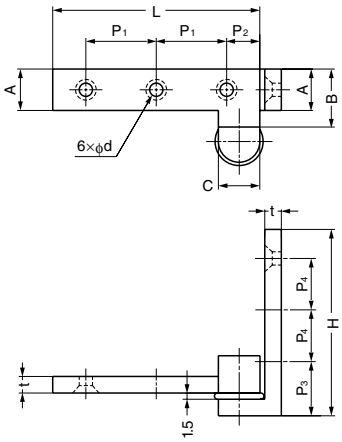

Right type shown.

Item Code	Item Name	Material	Finish	L	t	H	A	B	C	P_1	P_2	P_3	P_4	d	Door				Weight	Box	Carton
															Width	Height	Thickness	Weight			
170-090-978	PAW-50	Brass	Satin Nickel	50	4	45	10	14	10	17	8	13	12.5	3.2	Max. 450	Max. 700	14	Max. 2.6 kg/pair	98 g	10 pairs	200 pairs
170-090-975	PAW-60	Brass	Satin Nickel	60	4.5	50	12	16	12	21	9	12.5	15.5	3.2	Max. 450	Max. 700	16	Max. 2.6 kg/pair	133 g	10 pairs	200 pairs
170-090-979	PAW-80	Brass	Satin Nickel	80	6	70	16	20	15	30	10	15	23	4.2	Max. 450	Max. 700	20	Max. 4 kg/pair	356 g	8 pairs	32 pairs
170-090-980	PAW-95	Brass	Satin Nickel	95	6.5	80	19	28	16	35	12.5	18	25.5	4.2	Max. 450	Max. 700	28	Max. 4 kg/pair	509 g	6 pairs	24 pairs

INSET DOOR PIVOT HINGE

STAINLESS

PH

Remarks

Sold in pairs.

Parts Included

- Countersunk head wood screw 3.1×20 (SUS) (PH-50, 60)
- Countersunk head wood screw 3.8×25 (SUS) (PH-80, 90)

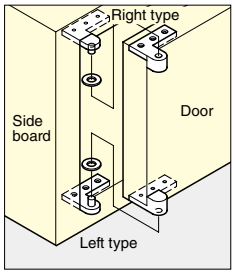

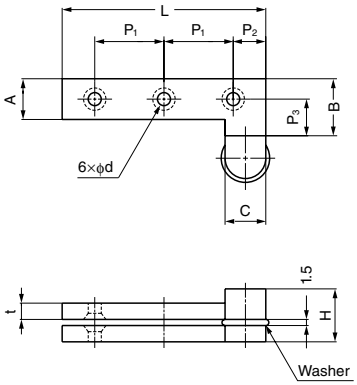

Right type shown.

Item Code	Item Name	Material	Finish	L	t	H	A	B	C	P_1	P_2	P_3	d	Door				Weight	Box	Carton
														Width	Height	Thickness	Weight			
170-090-984	PH-50	Brass	Satin Nickel	50	4	13	10	14	10	17	8	9	3.2	Max. 450	Max. 700	Min. 14 mm	Max. 2.6 kg/pair	90 g	10 pairs	200 pairs
170-090-976	PH-60	Brass	Satin Nickel	60	4.5	13	12	16	12	21	9	9	3.2	Max. 450	Max. 700	Min. 16 mm	Max. 2.6 kg/pair	133 g	10 pairs	200 pairs
170-090-985	PH-80	Brass	Satin Nickel	80	6	22	16	20	15	30	10	12	4.2	Max. 450	Max. 700	Min. 20 mm	Max. 4 kg/pair	343 g	8 pairs	32 pairs
170-090-986	PH-95	Brass	Satin Nickel	95	6.5	22	19	28	16	35	12.5	18.5	4.2	Max. 450	Max. 700	Min. 28 mm	Max. 4 kg/pair	520 g	6 pairs	24 pairs

INSET DOOR PIVOT HINGE

TTS-902

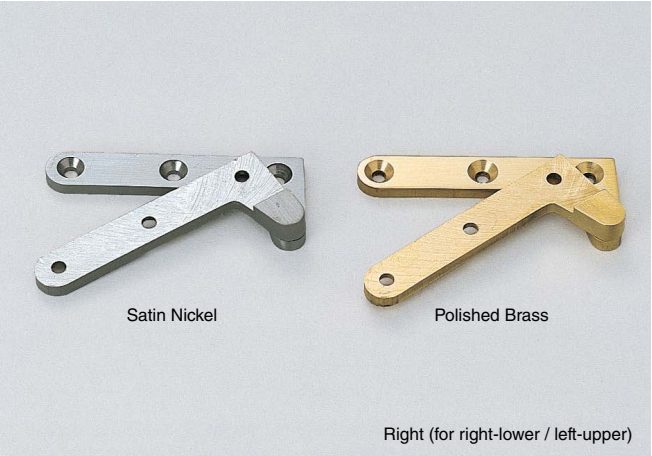

Remarks

Sold by piece.

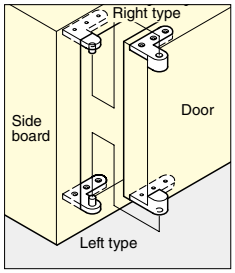

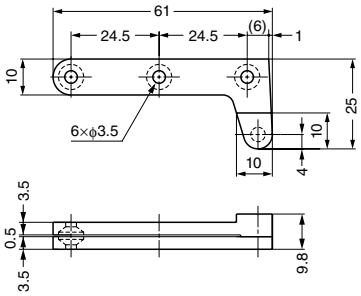

Right type shown.

Item Code	Item Name	Type	Material	Finish	Weight	Box
170-090-126	TTS-902WBL	Left (for left-lower / right-upper)	Brass	Satin Nickel	41 g	20 pairs
170-090-125	TTS-902WBR	Right (for right-lower / left-upper)	Brass	Satin Nickel	41 g	20 pairs
170-090-128	TTS-902ML	Left (for left-lower / right-upper)	Brass	Polished	43 g	20 pairs
170-090-127	TTS-902MR	Right (for right-lower / left-upper)	Brass	Polished	43 g	20 pairs

OVERLAY DOOR ANGLE HINGE

L=R

AHS

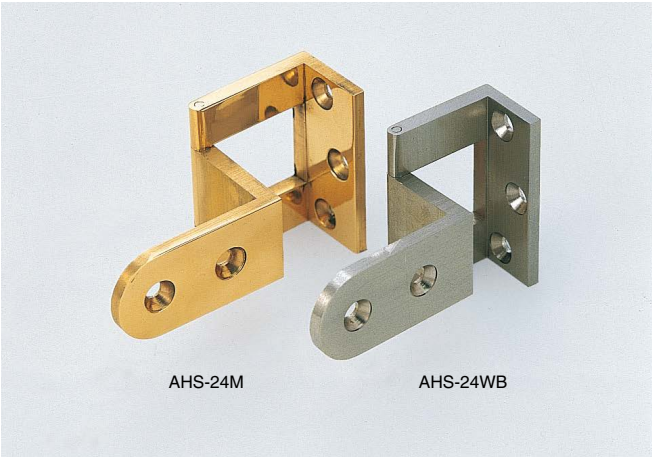

Remarks

Recommended for use in pairs.

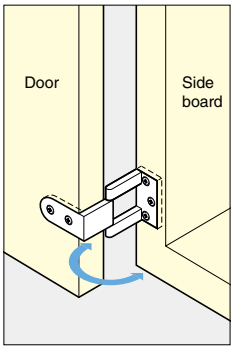

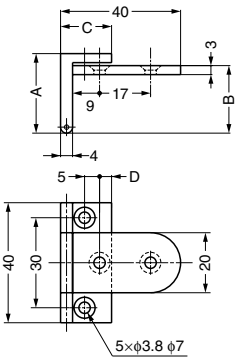

Item Code	Item Name	Material	Finish	A	B	C	D	Door				Weight	Box	Carton
								Width	Height	Thickness	Weight			
170-090-010	AHS-20M	Brass	Polished	26.5	22.5	17	4	Max. 450	Max. 700	20	Max. 2.6 kg/2 pcs	61 g	20 pcs	360 pcs
170-090-011	AHS-20WB	Brass	Satin Nickel	26.5	22.5	17	4	Max. 450	Max. 700	20	Max. 2.6 kg/2 pcs	61 g	20 pcs	360 pcs
170-090-015	AHS-24M	Brass	Polished	30.5	27	20	5.5	Max. 450	Max. 700	24	Max. 2.6 kg/2 pcs	71 g	20 pcs	360 pcs
170-090-016	AHS-24WB	Brass	Satin Nickel	30.5	27	20	5.5	Max. 450	Max. 700	24	Max. 2.6 kg/2 pcs	71 g	20 pcs	360 pcs

OVERLAY DOOR ANGLE HINGE

L=R

AHW

Remarks

Recommended for use in pairs.

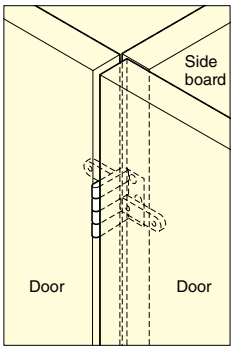

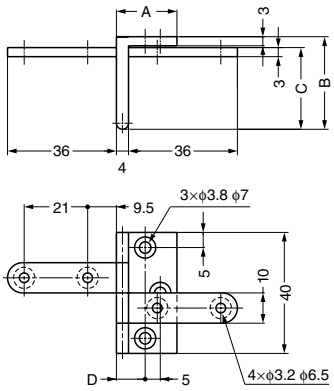

Item Code	Item Name	Material	Finish	A	B	C	D	Door				Weight	Box	Carton
								Width	Height	Thickness	Weight			
170-090-020	AHW-20M	Brass	Polished	17	26.5	22.5	8	Max. 450	Max. 700	20	Max. 2.6 kg/2 pcs	63 g	25 pcs	200 pcs
170-090-021	AHW-20WB	Brass	Satin Nickel	17	26.5	22.5	8	Max. 450	Max. 700	20	Max. 2.6 kg/2 pcs	63 g	25 pcs	200 pcs
170-090-025	AHW-24M	Brass	Polished	20	30.5	27	9.5	Max. 450	Max. 700	24	Max. 2.6 kg/2 pcs	72 g	20 pcs	80 pcs
170-090-026	AHW-24WB	Brass	Satin Nickel	20	30.5	27	9.5	Max. 450	Max. 700	24	Max. 2.6 kg/2 pcs	72 g	20 pcs	80 pcs

OVERLAY DOOR ANGLE HINGE

L=R **AHA-24**

Remarks

Recommended for use in pairs.

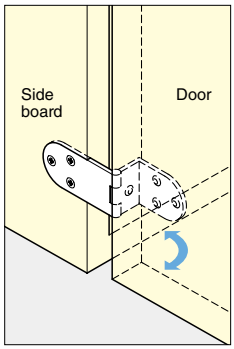

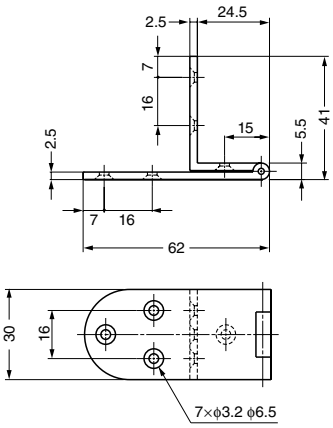

Item Code	Item Name	Material	Finish	Door				Weight	Box	Carton
				Width	Height	Thickness	Weight			
170-090-030	AHA-24SG	Brass	Satin Gold	Max. 450	Max. 700	24	Max. 2.6 kg/2 pcs	70 g	50 pcs	200 pcs
170-090-031	AHA-24WB	Brass	Satin Nickel	Max. 450	Max. 700	24	Max. 2.6 kg/2 pcs	70 g	50 pcs	200 pcs

OVERLAY DOOR ANGLE HINGE

L=R **AHB-18**

Remarks

Recommended for use in pairs.

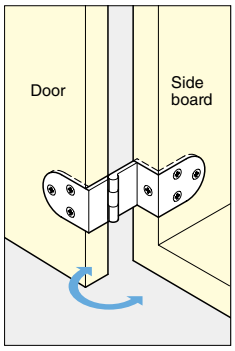

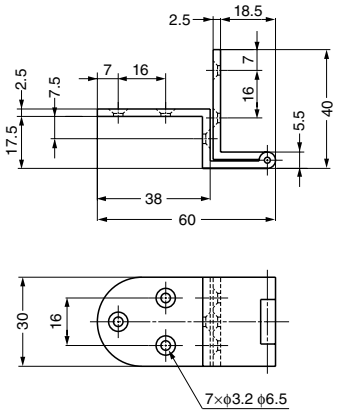

Item Code	Item Name	Material	Finish	Door				Weight	Box	Carton
				Width	Height	Thickness	Weight			
170-090-035	AHB-18SG	Brass	Satin Gold	Max. 450	Max. 700	18	Max. 2.6 kg/2 pcs	76 g	50 pcs	200 pcs
170-090-036	AHB-18WB	Brass	Satin Nickel	Max. 450	Max. 700	18	Max. 2.6 kg/2 pcs	76 g	50 pcs	200 pcs

DROP HINGE (ADJUSTABLE TYPE)

L=R

SDH-001

Features

- Opening angle 90˚.
- 3-way adjustment:
  Door gap : +1 mm / Horizontal : ±1 mm / Overlay : 14-16 mm
- Flush when opened, ideal for writing desk application.
- Can be used with soft-down stay SDS-100 (P.510) or NSDX-10 (P.518).
- Glass door type SDH-G (P.412) is also available.

Recommended Screws

Pan head tapping screw 3×13

Sold Separately

Pan head tapping screw 3×13 coated in black for SDH-001BL (300 pcs/1 pack)

Item Code	Item Name	Material	Finish	Overlay	Door Thickness	Opening Angle	Weight	Box	Carton
170-090-471	SDH-001	Zinc Alloy (ZDC)	Nickel	14 - 16	16 - 20	90˚	85 g	50 pcs	200 pcs
170-010-648	SDH-001BL	Zinc Alloy (ZDC)	Black	14 - 16	16 - 20	90˚	85 g	50 pcs	200 pcs

Pan Head Tapping Screw 3×13 in Black (For SDH-001BL)

Item Code	Item Name	1 pack
170-011-885	SDH-001-S-BL	300 pcs

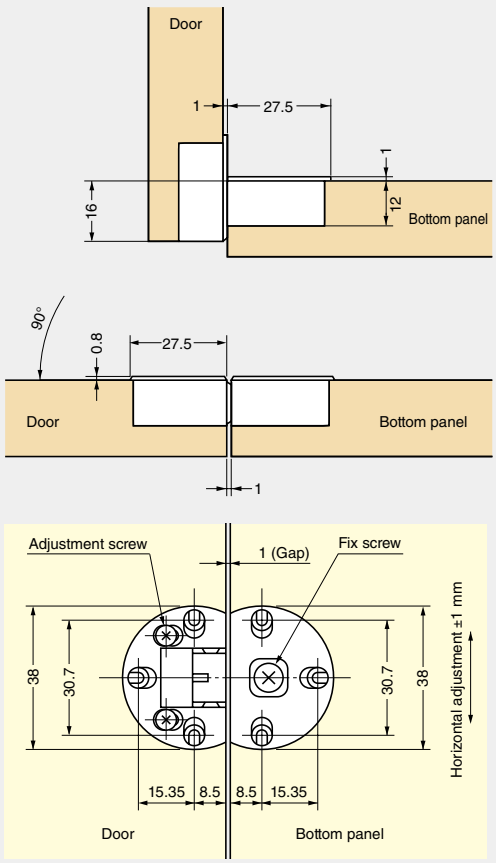

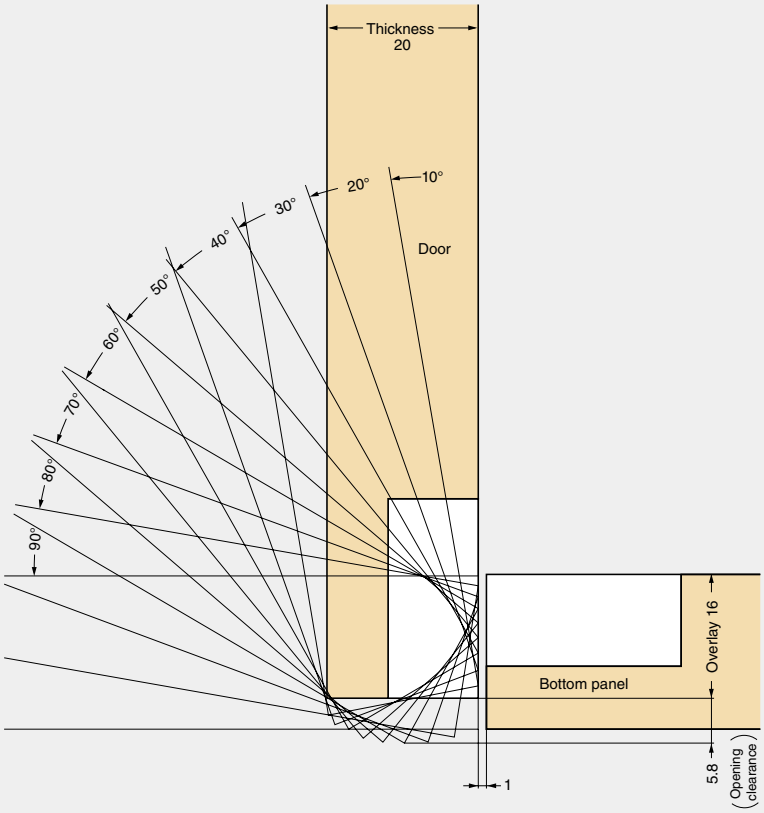

Example (door thickness : 20 mm / bottom panel : 20 mm / overlay : 16 mm)

Application Example

Combination of HDS-10 lid support (P.504).

Cut Out Dimensions

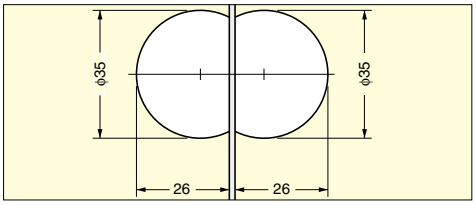

Number of Hinges

In case of door thickness up to 20 mm.
Material : particle board.

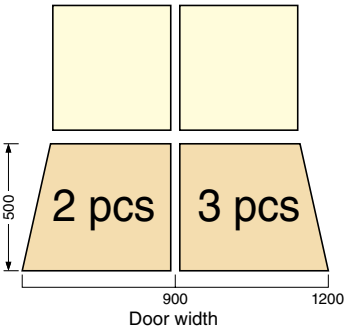

DROP HINGE (ADJUSTABLE TYPE)

L=R

SDH-P

Features

- 3-way adjustment.
  Overlay: 16-19 mm / Horizontal: ±1 mm / Door gap: 1-3 mm
- Can be used with soft-down stay SDS-100, SDS-100TV, NSDX-10(R/L)K, NSDX-10(R/L)K-TV, CSD-10-TV.

Recommended Screws

Pan head tapping screw 3.5

Sold Separately

Cover cap SDH-PSC-BL and SDH-PMC-BL

Drop Hinge + Covers

Item Code	Item Name
170-035-444	SDH-P-BL-SET
170-037-357	SDH-P-WT-SET
170-037-358	SDH-P-NI-SET

Cover Set (Covers for Socket and Mounting Plate)

Item Code	Item Name	Material	Colour
170-034-769	SDH-PC-BL	ABS	Black
170-034-828	SDH-PC-WT	ABS	White
170-034-829	SDH-PC-NI	ABS	Nickel

Drop Hinge

Item Code	Item Name	Material	Finish	Overlay	Door Thickness	Opening Angle	Box	Carton
170-034-200	SDH-P	Steel	Nickel	16 - 19	16 - 20	90˚	50 pcs	200 pcs

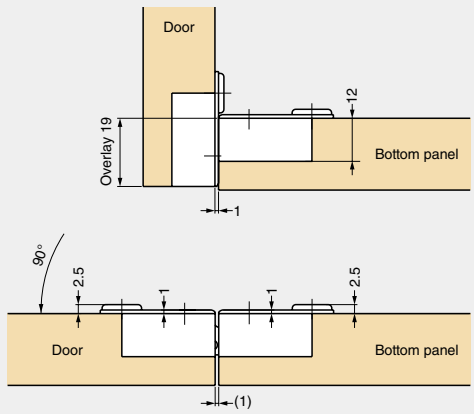

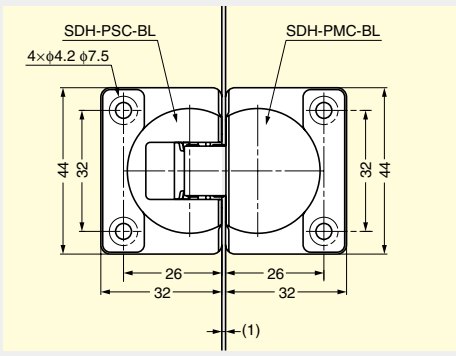

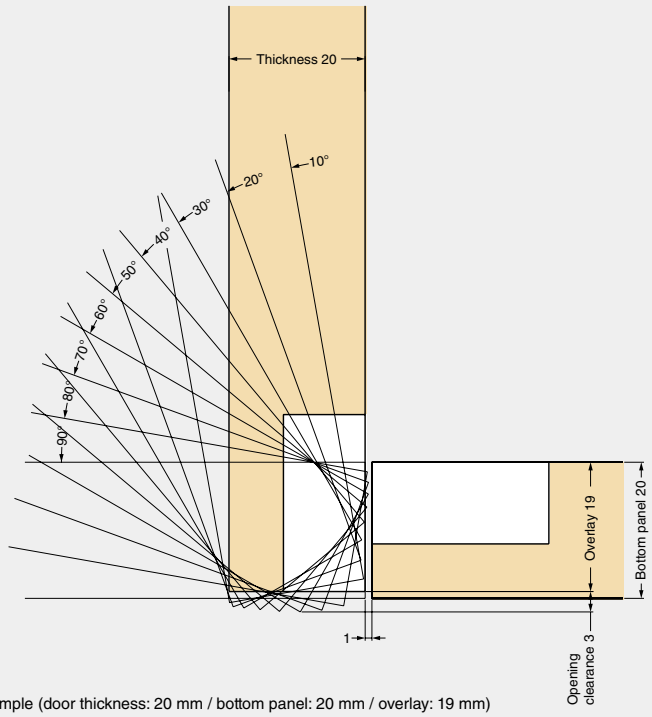

Example (door thickness: 20 mm / bottom panel: 20 mm / overlay: 19 mm)

Cut Out Dimensions

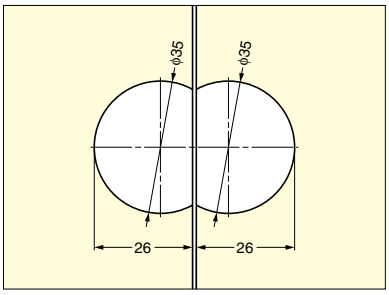

Number of Hinges

In case of door thickness up to 20 mm. Material: particle board.

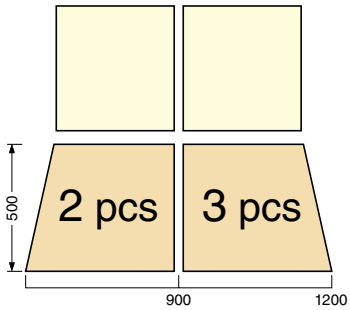

Door width

DROP HINGE (FOR GLASS DOOR)

L=R

SDH-G

Features

- Opening angle 90˚.
- 3-way adjustment:
  Door gap : 2-3 mm / Horizontal : ±1 mm / Overlay : 14-16 mm
- Can be used with soft-down stay SDS-100 (P.510) or NSDX-10 (P.518).

Sold Separately

Face plate SDH-FP

Item Code	Item Name	Material	Finish	Overlay	Glass Thickness	Opening Angle	Weight	Box
170-016-331	SDH-G	Zinc Alloy (ZDC)	Nickel	14 - 16	4 - 6	90˚	91 g	50 pcs

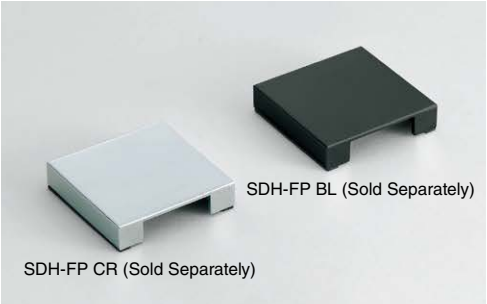

Face Plate (Sold Separately)

Item Code	Item Name	Material	Finish/Colour	Weight	Box
170-016-332	SDH-FP CR	Zinc Alloy (ZDC)	Chrome	43 g	50 pcs
170-016-333	SDH-FP BL	Zinc Alloy (ZDC)	Black	43 g	50 pcs

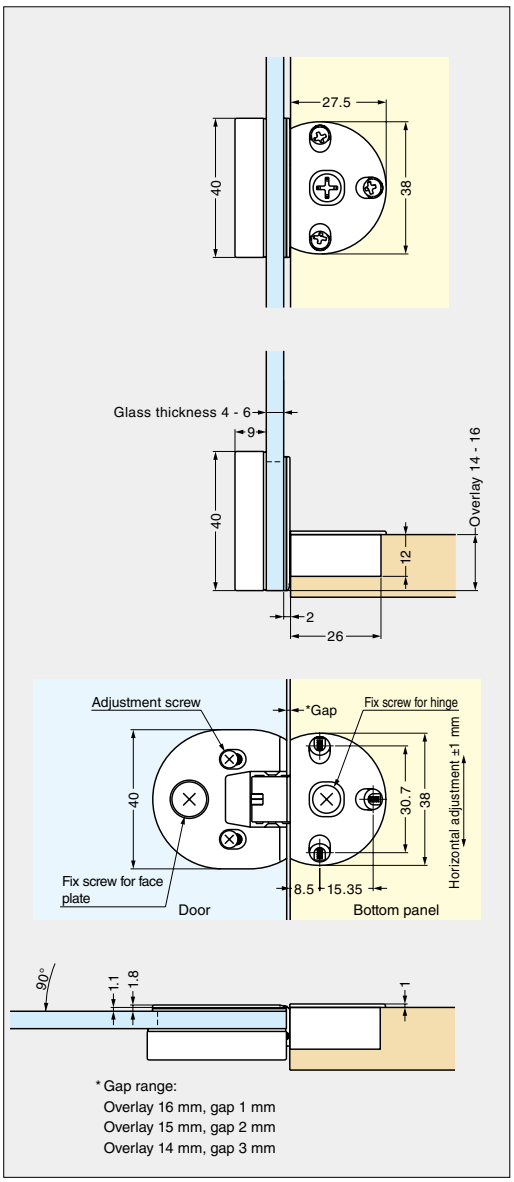

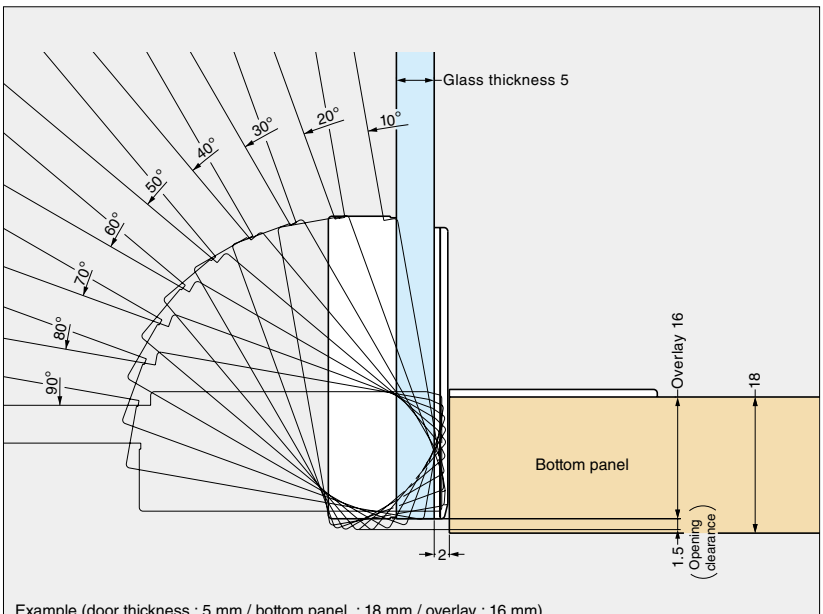

Example (door thickness : 5 mm / bottom panel : 18 mm / overlay : 16 mm)

Cut Out Dimensions

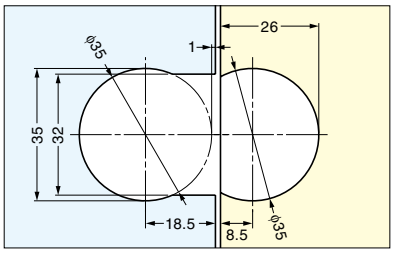

Application Example

Combination with SDS-100-TV lid support (P.511).

Qty of Hinges

In case glass thickness is from 4 to 6 mm.

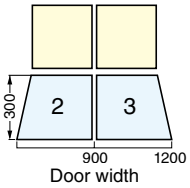

TABLETOP HINGE

L=R **MH-30**

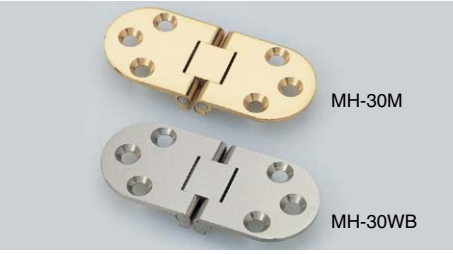

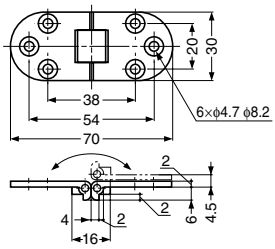

Features

Double pivot hinge allows 180˚ opening.

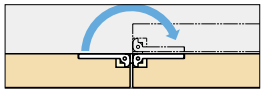

Item Code	Item Name	Material	Finish	Door Width	Door Height	Door Thickness	Door Weight	Weight	Box	Carton
170-090-052	MH-30M	Brass	Polished	Max. 450	Max. 700	Max. 21	Max. 4 kg/2 pcs	45 g	24 pcs	360 pcs
170-090-051	MH-30WB	Brass	Satin Nickel	Max. 450	Max. 700	Max. 21	Max. 4 kg/2 pcs	45 g	24 pcs	360 pcs
170-090-050	MH-30CR	Brass	Chrome	Max. 450	Max. 700	Max. 21	Max. 4 kg/2 pcs	45 g	24 pcs	360 pcs

TABLETOP HINGE

L=R **MH-40**

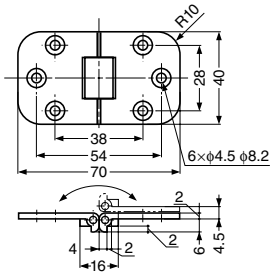

Features

Double pivot hinge allows 180˚ opening.

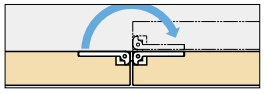

Item Code	Item Name	Material	Finish	Door Width	Door Height	Door Thickness	Door Weight	Weight	Box	Carton
170-090-057	MH-40M	Brass	Polished	Max. 450	Max. 700	Max. 21	Max. 4 kg/2 pcs	64 g	16 pcs	240 pcs
170-090-056	MH-40WB	Brass	Satin Nickel	Max. 450	Max. 700	Max. 21	Max. 4 kg/2 pcs	64 g	16 pcs	240 pcs
170-090-055	MH-40CR	Brass	Chrome	Max. 450	Max. 700	Max. 21	Max. 4 kg/2 pcs	64 g	16 pcs	240 pcs

TABLETOP HINGE

L=R STAINLESS 304 STEEL **MH-83**

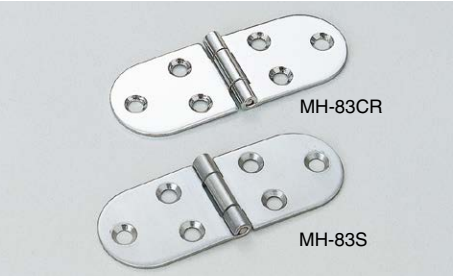

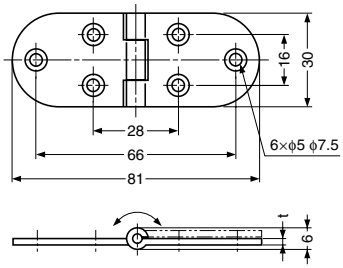

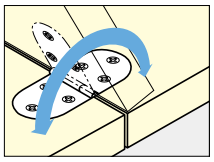

Item Code	Item Name	Material	Finish	t	Door Width	Door Height	Door Thickness	Door Weight	Weight	Box	Carton
170-090-046	MH-83CR	Steel	Chrome	1.6	Max. 450	Max. 700	Max. 21	Max. 4 kg/2 pcs	31 g	100 pcs	1000 pcs
170-090-045	MH-83S	Stainless Steel (SUS304)	Satin	1.5	Max. 450	Max. 700	Max. 21	Max. 4 kg/2 pcs	28 g	100 pcs	1000 pcs

TABLETOP HINGE

L=R STAINLESS 304 STEEL **MA-5**

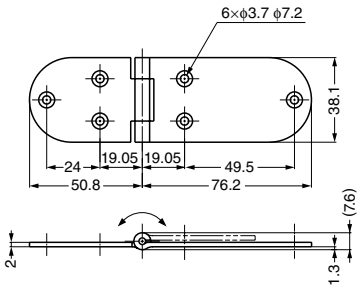

Recommended Screw

Countersunk head wood screw 3.5

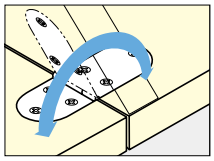

Item Code	Item Name	Material	Finish	Door Width	Door Height	Door Thickness	Door Weight	Weight	Box	Carton
170-918-023	MA-5	Stainless Steel (SUS304)	Mirror	Max. 450	Max. 700	Max. 21	Max. 4 kg/2 pcs	77 g	35 pcs	350 pcs

PIANO HINGE

L=R STAINLESS 430 STEEL STAINLESS 304 STEEL

LS, LSD, LB30, LB45

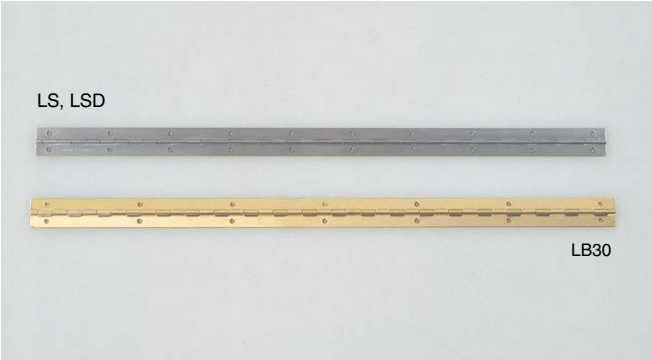

Features

- Double folded construction provides extra rigidity.
- Can be cut to any length.
- In case of cutting the hinge, attention should be paid to prevent the pin from coming out.

- LS, LSD, and LB30

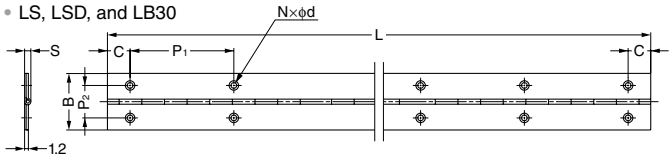

- LB45

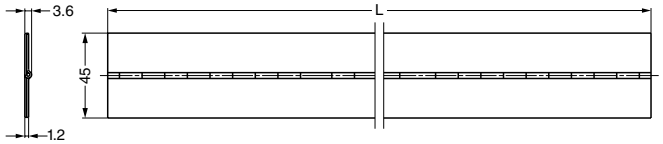

Application Example

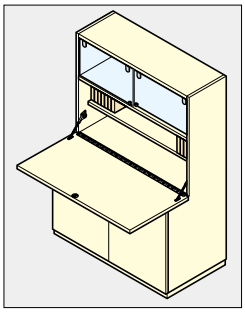

- LS, LSD, and LB30

Item Code	Item Name	Material	Finish	L	B	C	P_1	P_2	Qty of Holes N	d	S	Weight	Box	Carton
170-090-240	LS- 240	Stainless Steel (SUS430)	Satin	240	24.5	10.5	43.5	14.5	12	3	3.5	65 g	20 pcs	200 pcs
170-090-246	LSD- 240	Stainless Steel (SUS304)	Satin	240	30	10.5	43.5	17	12	3	3.5	65 g	20 pcs	200 pcs
170-090-241	LS- 300	Stainless Steel (SUS430)	Satin	300	24.5	10.5	46.3	14.5	14	3	3.5	80 g	20 pcs	200 pcs
170-090-247	LSD- 300	Stainless Steel (SUS304)	Satin	300	30	10.5	46.3	17	14	3	3.5	80 g	20 pcs	200 pcs
170-090-242	LS- 360	Stainless Steel (SUS430)	Satin	360	30	15	47	17	16	3	3.5	105 g	20 pcs	200 pcs
170-090-248	LSD- 360	Stainless Steel (SUS304)	Satin	360	30	15	47	17	16	3	3.5	105 g	20 pcs	200 pcs
170-090-243	LS- 450	Stainless Steel (SUS430)	Satin	450	30	14.5	60	17	16	3	3.5	135 g	20 pcs	100 pcs
170-090-249	LSD- 450	Stainless Steel (SUS304)	Satin	450	30	14.5	60	17	16	3	3.5	135 g	20 pcs	100 pcs
170-090-244	LS- 600	Stainless Steel (SUS430)	Satin	600	30	14	63.3	17	20	3	3.5	190 g	20 pcs	100 pcs
170-090-250	LSD- 600	Stainless Steel (SUS304)	Satin	600	30	14	63.3	17	20	3	3.5	190 g	20 pcs	100 pcs
170-090-245	LS- 900	Stainless Steel (SUS430)	Satin	900	30	14	62.3	17	30	3	3.5	270 g	20 pcs	100 pcs
170-090-251	LSD- 900	Stainless Steel (SUS304)	Satin	900	30	14	62.3	17	30	3	3.5	270 g	20 pcs	100 pcs
170-090-252	LB30- 900	Brass	Polished	900	30	15	79	18	24	3.3	3.6	290 g	10 pcs	100 pcs
170-090-253	LB30-1200	Brass	Polished	1200	30	15	83.6	18	30	3.3	3.6	385 g	10 pcs	100 pcs
170-090-254	LB30-1800	Brass	Polished	1800	30	15	80.5	18	46	3.3	3.6	600 g	10 pcs	100 pcs

- LB45

Item Code	Item Name	Material	Finish	L	Weight	Box	Carton
170-090-255	LB45-1200	Brass	Polished	1200	570 g	10 pcs	30 pcs
170-090-256	LB45-1800	Brass	Polished	1800	840 g	10 pcs	30 pcs

PIANO HINGE

L=R STAINLESS 304 STEEL **LHN**

Features

- Can be cut to any length.
- In case of cutting the hinge, attention should be paid to prevent the pin from coming out.

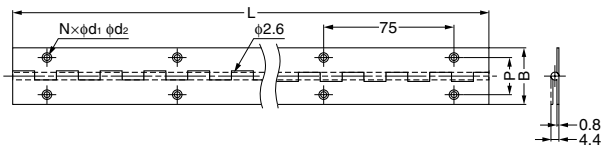

Application Example

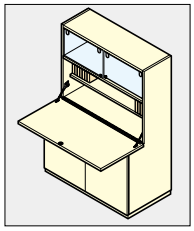

Item Code	Item Name	Material	Finish	L	B	P	Qty of Holes N	d_1	d_2	Weight	Box
170-097-846	LHN-32-1200	Stainless Steel (SUS304)	Polished	1200	32	20	32	4	5.2	400 g	30 pcs
170-097-847	LHN-32-1500	Stainless Steel (SUS304)	Polished	1500	32	20	40	4	5.2	425 g	30 pcs
170-097-848	LHN-32-1872	Stainless Steel (SUS304)	Polished	1872	32	20	50	4	5.2	530 g	30 pcs
170-097-849	LHN-32-2100	Stainless Steel (SUS304)	Polished	2100	32	20	56	4	5.2	595 g	30 pcs
170-097-850	LHN-38-1200	Stainless Steel (SUS304)	Polished	1200	38	22.5	32	4.6	6	400 g	30 pcs
170-097-843	LHN-38-1500	Stainless Steel (SUS304)	Polished	1500	38	22.5	40	4.6	6	480 g	30 pcs
170-097-844	LHN-38-1872	Stainless Steel (SUS304)	Polished	1872	38	22.5	50	4.6	6	600 g	30 pcs
170-097-845	LHN-38-2100	Stainless Steel (SUS304)	Polished	2100	38	22.5	56	4.6	6	670 g	30 pcs

TABLETOP PIANO HINGE

L=R STEEL **HG-MH**

Features

- Opening angle 180˚ thanks to the double joint mechanism.
- Can be cut easily.
- In case of cutting the hinge, attention should be paid to prevent the pin from coming out.

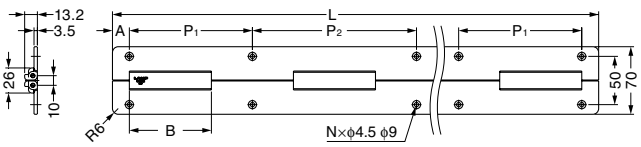

Cut Out Dimensions

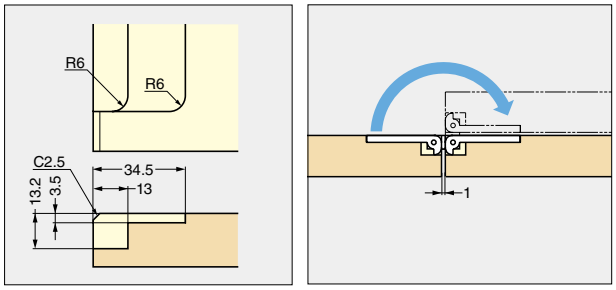

Item Code	Item Name	Material	Finish	L	A	P_1	P_2	B	Qty of Holes N	Weight	Box
170-012-587	HG-MH400S	Aluminium Alloy	Anodized/Stainless Finish	400	15	111	148	74	8	452 g	15 pcs
170-012-588	HG-MH400BR	Aluminium Alloy	Anodized/Brown	400	15	111	148	74	8	452 g	15 pcs
170-012-589	HG-MH400BL	Aluminium Alloy	Anodized/Black	400	15	111	148	74	8	452 g	15 pcs
170-012-590	HG-MH800S	Aluminium Alloy	Anodized/Stainless Finish	800	17.5	127.5	170	85	12	908 g	10 pcs
170-012-591	HG-MH800BR	Aluminium Alloy	Anodized/Brown	800	17.5	127.5	170	85	12	908 g	10 pcs
170-012-592	HG-MH800BL	Aluminium Alloy	Anodized/Black	800	17.5	127.5	170	85	12	908 g	10 pcs
170-012-593	HG-MH1100S	Aluminium Alloy	Anodized/Stainless Finish	1100	16.5	145.5	194	97	14	1,236 g	8 pcs
170-012-594	HG-MH1100BR	Aluminium Alloy	Anodized/Brown	1100	16.5	145.5	194	97	14	1,236 g	8 pcs
170-012-595	HG-MH1100BL	Aluminium Alloy	Anodized/Black	1100	16.5	145.5	194	97	14	1,236 g	8 pcs

CONCEALED HINGE

L=R STAINLESS 304 STEEL STAINLESS

RK-50

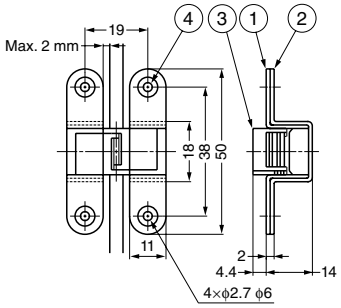

Installation

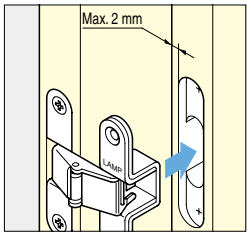

Features

For light door.

Remarks

Recommended for use in pairs.

Parts Included

Countersunk head wood screw 2.4×13 (SUS)

No.	Part Name	Material	Finish
①	Body	Stainless Steel (SUS304)	Satin
②	Cover	Stainless Steel (SUS304)	Plain
③	Arm	Stainless Steel (SUS304)	Satin
④	Eyelet	Stainless Steel (SUS304)	Plain
-	Other Axis Parts	Stainless Steel (SUS304)	Plain

Item Code	Item Name	Door Width	Door Height	Door Thickness	Door Weight	Opening Angle	Weight	Box	Carton
170-090-086	RK-50	Max. 450	Max. 700	Min. 15	Max. 2.6 kg/2 pcs	180˚	28 g	24 pcs	240 pcs

CONCEALED HINGE

L=R STAINLESS

R

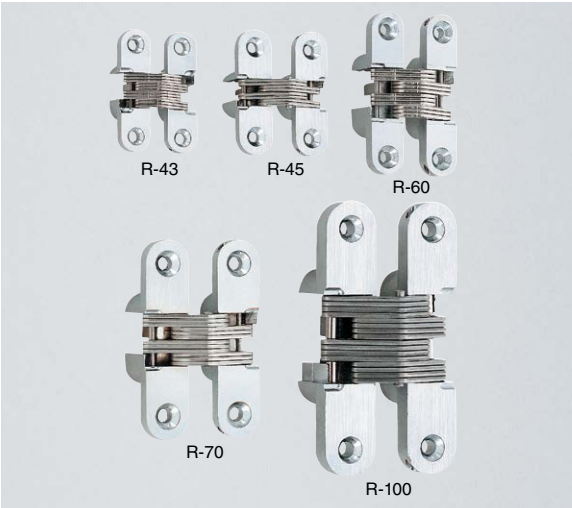

Reference for Your Choice

To determine the number of hinges required for each door:

- Using the chart to the right, locate the correct door width (upper scale) and door weight (lower scale). Draw a line connecting these 2 points to the chart below (point "a"). Then draw a vertical line through the lower chart to find the number and type of hinges required.
- Check door thickness requirements.

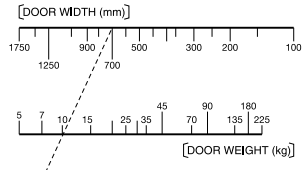

Item No.	Required Number Of Hinges (pcs)	"a"	Min. Door Thickness
R-43	2 3 4		13 mm
R-45	2 3 4		19 mm
R-60	2 3 4		19 mm
R-70	2 3 4		25 mm
R-100	2 3 4		29 mm

Features

Door size: Max. W450 x H700 x t 21 mm

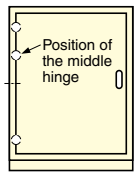

Example of 3 hinge installation.

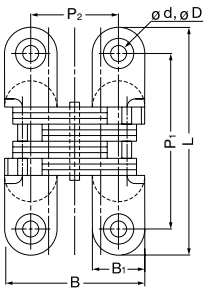

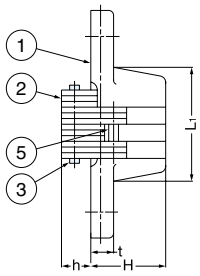

Parts Included

- Countersunk head wood screw (SUS)
- Countersunk head tapping screw (SUS) (R-70 only)

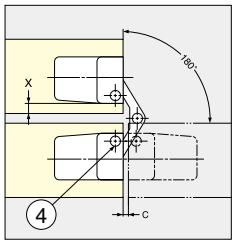

Distance between door edge and hinge must be less than the figures shown in column "X" of the dimension table below.

Item No.	Qty of Hinges
R- 43	3 pcs
R- 45	3 pcs
R- 60	3 pcs
R- 70	2 pcs
R-100	2 pcs

No.	Part Name	Material					Finish
		R-43	R-45	R-60	R-70	R-100	
①	Body	Zinc Alloy					Satin Chrome
②	Arm	Stainless Steel (SUS304)					Plain
③	Shaft	Stainless Steel			Stainless Steel (SUS303)	Stainless Steel	
④	Shaft	Stainless Steel (SUS304)				Steel	
⑤	Shaft						
*	Roller	-					Nickel

[In case of door width, 700 mm and door weight, 15 kg]

Item Code	Item Name	L	L_1	B	B_1	P_1	P_2	H	h	t	d	D	C	X	Screw	Number of Arm	Opening Angle	Weight	Box	Carton
170-090-079	R-43	43	22	29	11	32	18	13	5	5	3.5	6.2	0.8	2.3	3.1×16	12	180˚	42 g	30 pcs	300 pcs
170-090-084	R-45	45	19	35.7	13	32	22.7	18.5	6	5	3.5	7	0.8	3	3.1×20	8	180˚	61 g	20 pcs	200 pcs
170-090-081	R-60	60	33	35.2	13	47	22.2	18.5	6.5	6.5	4.3	8.3	1	3	3.5×20	12	180˚	104 g	10 pcs	100 pcs
170-095-200	R-70	70	35	42.6	16.1	53	26.6	23	7.3	7	4.6	9.1	1.2	3.5	4 ×25	12	180˚	164 g	10 pcs	100 pcs
170-095-201	R-100	100	52	53.2	20	80	33.2	27.5	9.5	9.5	5.3	10	1.8	4.8	4.5×32	16	180˚	351 g	10 pcs	60 pcs

CORNER FASTENER HINGE (W/ LOCK)

L=R STAINLESS 304 STEEL

STH-C64

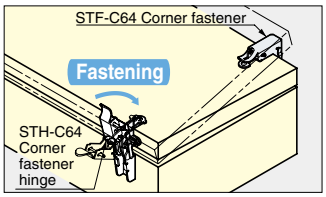

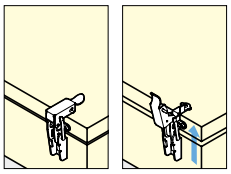

Pull the lever and lift the latch to open the lid.

Features

- Compresses cover to achieve better sealing.
- Works with STF-C64 fastener (P.278).
- To be used with rubber gasket.
- Locks when fastened to prevent accidental release.

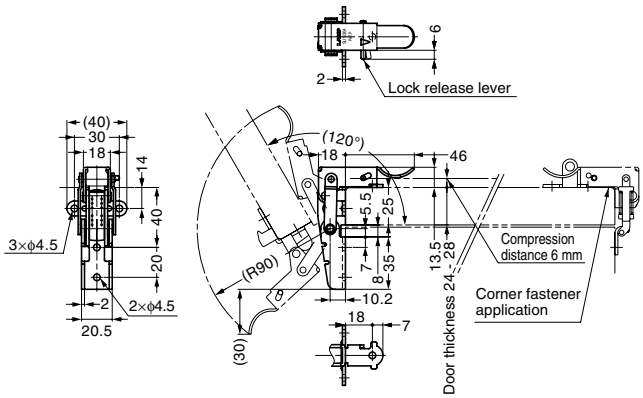

1. After locked.

2. Pull the lever and lift the latch.

3. Release the lock of the fastener to open the lid.

Item Code	Item Name	Material	Finish	Door Width	Door Height	Door Thickness	Door Weight	Weight	Box	Carton
170-091-430	STH-C64	Stainless Steel (SUS304)	Mirror	Max. 300	Max. 400/2 pcs	24 - 28	Max. 2.8 kg/2 pcs	93 g	10 pcs	140 pcs

CONCEALED HINGE (W/ STAY)

L=R STAINLESS 304 STEEL

HG-YS65C

Features

- Combination of hinge and stay.
- Designed for sheet metal application.
- Stay holds door at 100˚ open position.
- Removable pin (included) allows easy door installation.
- Holding force: 30 kgf·cm/piece.
- Door weight: Max. 10 kg/pair.

Remarks

Ring retainer for pins not included.

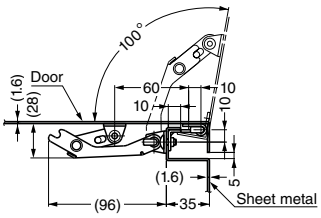

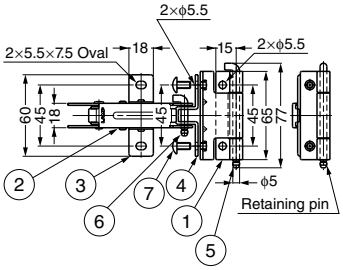

No.	Part Name	Material	Finish
①	Hinge	SUS304	Polished
②	Stay		
③	Bracket		
④	Hinge Bracket		
⑤	Pin		-
⑥	Hinge Bracket Pin		
⑦	Truss Head Tapping Screw M5×10 (Included)	SUS	

Item Cade	Item Name	Door Weight	Retaining Force	Weight	Box	Carton
170-100-087	HG-YS65C	Max. 10 kg/2 pcs	Approx. 294 N·cm (30 kgf·cm)/pc	190 g	10 pcs	100 pcs

Discontinued

Item Code	Item Name
170-090-034	2000RV-2

CONCEALED HINGE (SURFACE MOUNT) L=R 2000-150

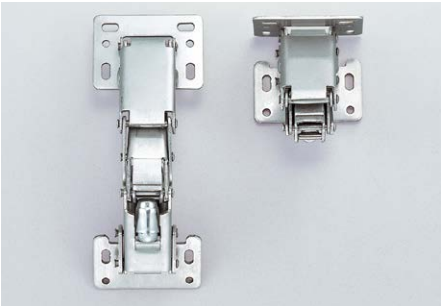

Number of Hinges

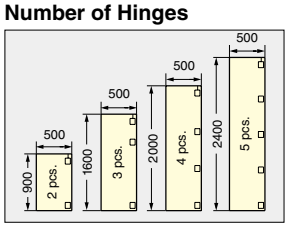

Application Example
(t = 18.5 mm / 20 mm overlay)

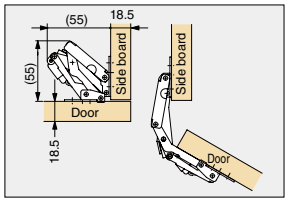

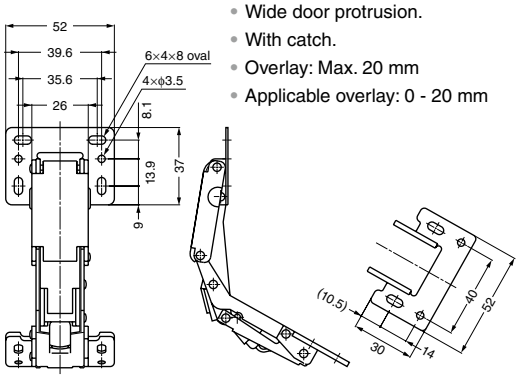

Features

- No need to cut-out on doors.
- Can be used both for inset and overlay doors.
- Wide door protrusion.
- With catch.
- Overlay: Max. 20 mm
- Applicable overlay: 0 - 20 mm

Item Code	Item Name	Material	Finish	Door Thickness	Opening Angle	Weight	Carton
170-090-884	2000-150	Steel	Nickel	Max. 20	150˚	149 g	100 pcs

CONCEALED HINGE (SURFACE MOUNT) L=R 2000-MIGNON

Number of Hinges

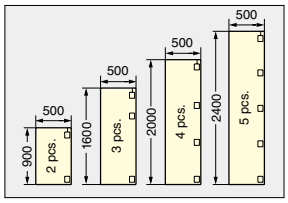

Application Example
(t = 15 mm / Inset doors)

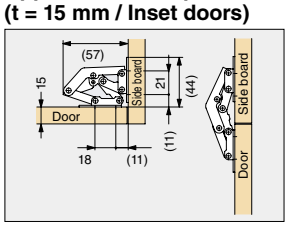

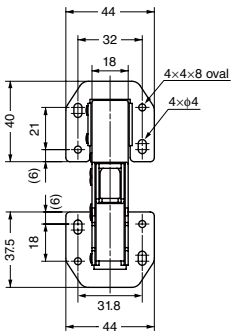

Features

- No need to cut-out on doors.
- Can be used both for inset and overlay doors.
- With catch.
- Overlay: Max. 20 mm
- Applicable overlay: 0 - 20 mm

Item Code	Item Name	Material	Finish	Door Thickness	Opening Angle	Weight	Box	Carton
170-090-001	2000-MIGNON	Steel	Nickel	Max. 20	90˚	70 g	20 pcs	200 pcs

CONCEALED HINGE (SURFACE MOUNT)

L=R

T-90-200

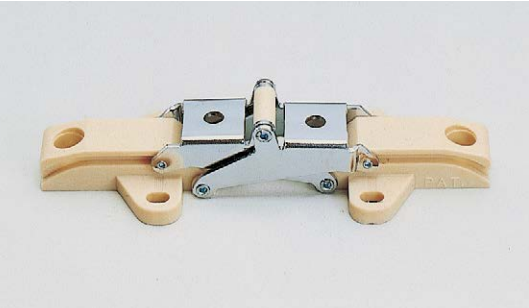

Features

- Opening angle 90˚.
- Can be used both for inset and overlay doors.
- Without catch.

Recommended Screws

Pan head tapping screw size 4

Part Name	Material	Finish/Colour
Body	Polyamide (PA)	Ivory
Arm	Steel	Chrome

Item Code	Item Name	Type	Overlay	Door Thickness	Opening Angle	Weight	Carton
170-090-090	T-90-200	Without Catch	15 - 18	15 - 18	90˚	42 g	200 pcs

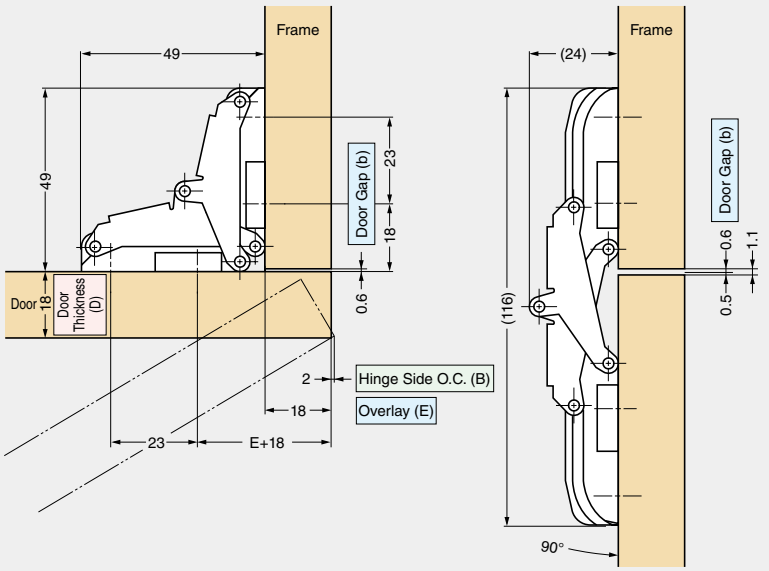

Example (Door thickness : 18 mm / overlay : 18 mm)

Hinge Side O.C. (B)

Door Thickness (D)	Overlay (E)			
	15	16	17	18
15	1.1	0.5	0	0
16	2.0	1.4	0.8	0.2
17	2.9	2.3	1.7	1.1
18	3.8	3.2	2.6	2.0
	Hinge Side O.C. (B)			

Handle Side O.C. (A)

Door Thickness (D)	Door Width		
	300	400	500
15	0.5	0.4	0.3
16	0.5	0.4	0.4
17	0.5	0.4	0.4
18	0.5	0.4	0.4
	Handle Side O.C. (A)		

Overlay (E) and Door Gap (b)

Overlay (E)	15	16	17	18
Door Gap (b)	0.2	0.3	0.5	0.6

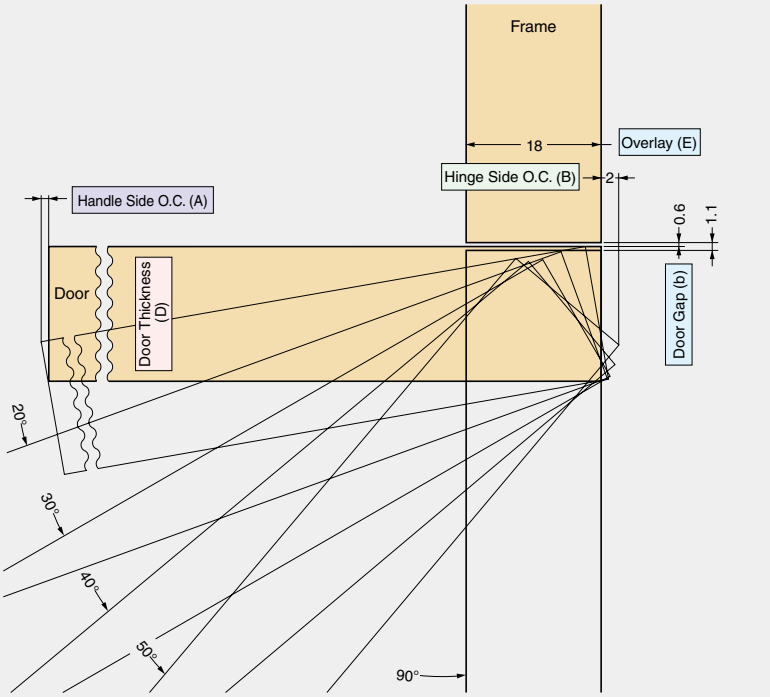

Example (Door and side board thickness : 18 mm / overlay : 18 mm)

DAMPER HINGE DIGEST

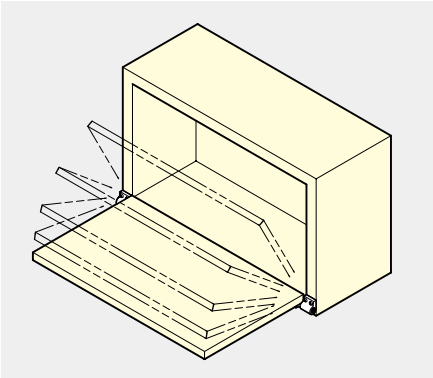

Features

- Hinge with soft-close damping mechanism controls the closing speed of the door and can reduce the door opening and closing shock.
- Wide range of soft-close damping hinges.

Application

Showcase, Piano, Dresser, Small lid in kitchen etc.

How to Select

- Check the torque moment (T) by following the calculation of the figure on the right.
- Choose the hinge that the torque moment will be matched with torque moment (T).

How to calculate the torque moment (in case the door has its centre of gravity positioned the centre of door).

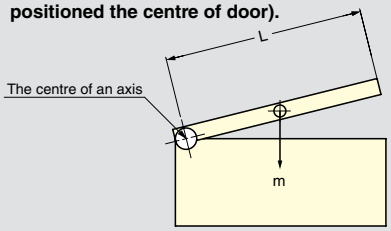

T: Door torque moment
m: Door weight (kg)
L: Length from the centre of an axis to door edge (m).

T (N·m)=m×9.8×L/2
T (kgf·cm)=m×L/2×100

Picture	Item Name	Torque Moment (Per pair) N·m	Torque Moment (Per pair) kgf·cm	Page	Torque Range
	HG-JHS9-S(U)-BL(WT)	0.027 - 0.043	0.28 - 0.44	P.421	
	HG-JHM9-S(U)-BL(WT)	0.054 - 0.086	0.55 - 0.88	P.422	
	HG-JHW16S-34(G)	4 - 6.8	40.8 - 69.4	P.428	
	HG-JHW16S-50(G)	6.8 - 10	69.4 - 102	P.428	
	HG-JHW16S-00	Without Soft-Close Damping Mechanism		P.428	
	HG-CSH63A(B)M	2 - 3.4	20.4 - 34.6	P.447	
	HG-CSH63A(B)H	3.4 - 5	34.6 - 51	P.447	
	HG-CSH63	Without Soft-Close Damping Mechanism		P.447	
	HG-JH14-50	3 - 5	30.6 - 51	P.428	
	HG-JHM14-S-8BL(WT)	0.5 - 0.8	5.09 - 8.15	P.424 - 425	
	HG-JHM14-S-15BL(WT)	0.8 - 1.5	8.15 - 15.29		
	HG-JHM14-S-20BL(WT)	1.5 - 2	15.29 - 20.39		
	HG-JHM16-34BL(WT)	2 - 3.4	20.4 - 34.7	P.426	
	HG-JHM16-50BL(WT)	3.4 - 5	34.7 - 51	P.426	
	HG-JHM20-80BL(WT)	6 - 8	61.2 - 81.6	P.427	
	HG-JH25	3 - 5	30.6 - 51	P.429	
	HG-JH35	5 - 7	51 - 71.4	P.429	
	HG-JHW50(G)	6 - 10	61.2 - 102	P.429	
	HG-JHW70(G)	10 - 14	102 - 142.8	P.429	

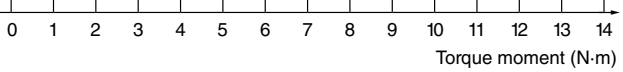

SELF-OPEN MINI DAMPER HINGE

Lapcon

HG-JHS9

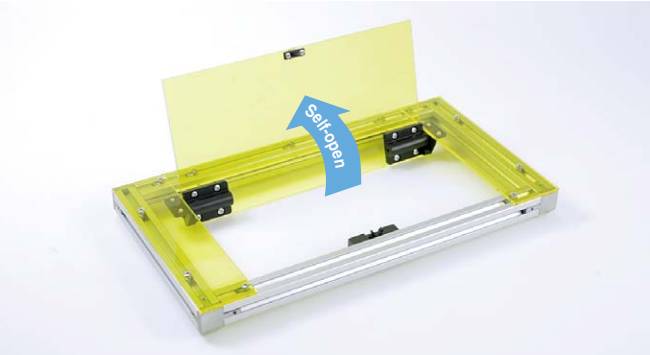

Application example with a push-latch.

HG-JHS9-S-BL (Side Mount)

HG-JHS9-U-WT (Under Mount)

Features

- Small damper hinge with self-opening function for top-opening lids.
- Using with a push-latch enables pop-up function of the lid.
- Inset use.
- Opening speed of the lid can easily be adjusted with a hex wrench.

Maximum Lid Torque Calculation

Video Link

T=M×L×9.8

T : Maximum lid torque (cN·m)
M : Lid weight (kg)
L : Distance from rotation centre to lid centre of gravity (cm)
L = D/2-A
D : Lid length (cm)
A : Length of lid back from rotation centre (cm)
t : Door thickness

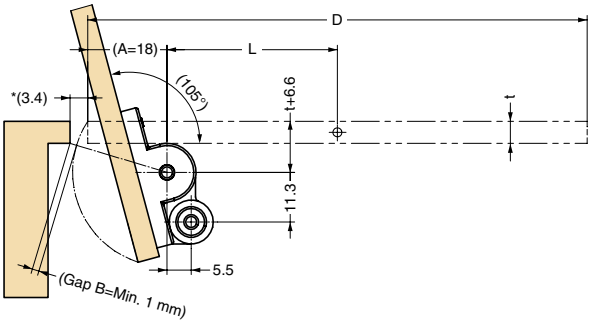

- Make sure that the gap B is Min. 1 mm.
- Please provide a stopper to hold the lid at the closed position.

*In case of t = 5 mm, B = 1 mm.

Side Mount Type

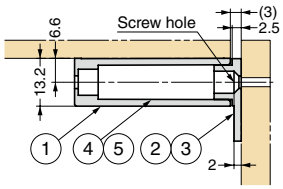

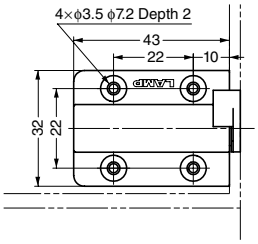

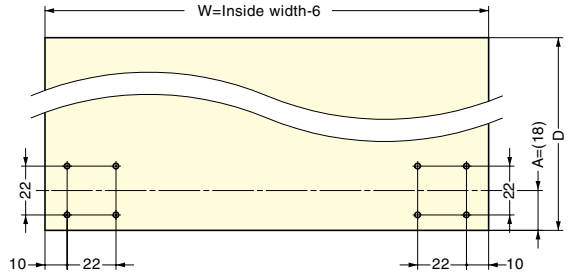

Under Mount Type

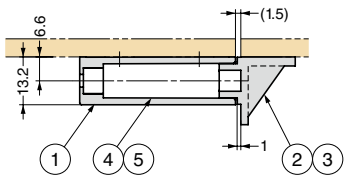

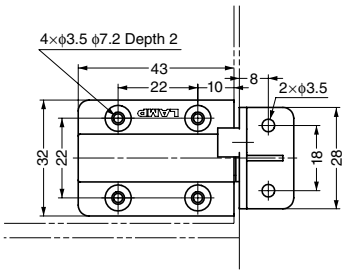

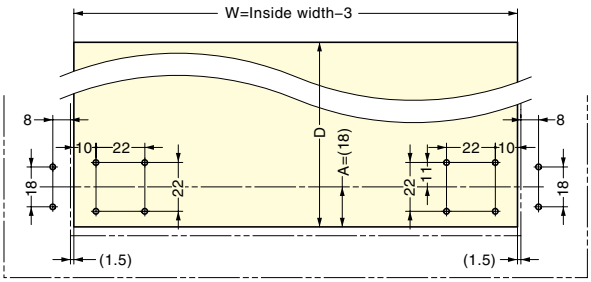

No.	Part Name	Material	Colour
①	Body	Polyacetal (POM)	Black, White
②	Bracket R	PBT	Black, White
③	Bracket L	PBT	Black, White
④	Damper Unit (R)	Polyacetal (POM)	–
⑤	Spring Unit (L)	Zinc Alloy (ZDC)/Stainless Steel	Chromate/–

Item Code	Item Name	Type	Colour	Torque Moment (Per pair)		Weight	Box	Carton
170-028-293	HG-JHS9-S-BL	Side Mount	Black	2.7 - 4.3 cN·m	0.28 - 0.44 kgf·cm	39 g	40 sets	440 sets
170-028-294	HG-JHS9-S-WT	Side Mount	White	2.7 - 4.3 cN·m	0.28 - 0.44 kgf·cm	39 g	40 sets	440 sets
170-028-295	HG-JHS9-U-BL	Under Mount	Black	2.7 - 4.3 cN·m	0.28 - 0.44 kgf·cm	42 g	35 sets	385 sets
170-028-296	HG-JHS9-U-WT	Under Mount	White	2.7 - 4.3 cN·m	0.28 - 0.44 kgf·cm	42 g	35 sets	385 sets

MINI DAMPER HINGE

Lapcon

HG-JHM9

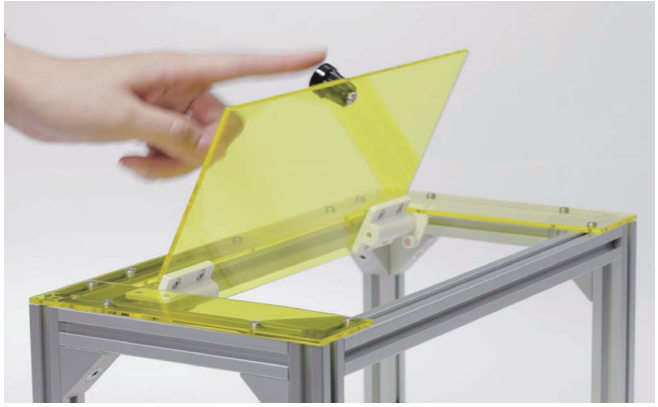

HG-JHM9-S-BL (Side Mount)

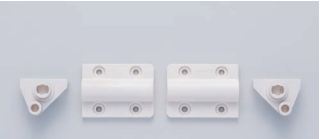

HG-JHM9-U-WT (Under Mount)

Features

- Hinge with built-in damper keeps lids from slamming shut.
- Ideal for small covers of desktop sockets.
- Sold in pairs.

Recommended Screws

- Side Mount: Countersunk head screw M3, Binding head screw M3, Countersunk head tapping screw 3, Binding head tapping screw 3
- Under Mount: Binding head screw M3, Binding head tapping screw 3

Maximum Lid Torque Calculation

T=M×L×9.8

T : Maximum lid torque (cN·m)
M : Lid weight (kg)
L : Distance from rotation centre to lid centre of gravity (cm)
L = D/2-A
D : Lid length (cm)
A : Length of lid back from rotation centre (cm)
t : Door thickness

Video Link

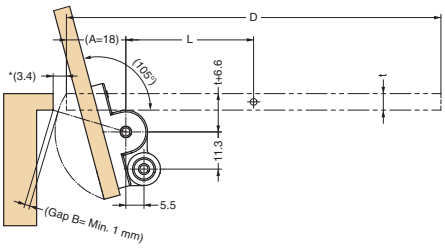

- Make sure that the gap B is Min. 1 mm.
- Please provide a stopper to hold the lid at the closed position.

*In case of t = 5 mm, B = 1 mm.

Damping Direction

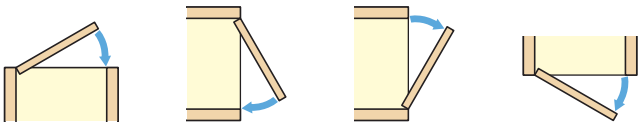

Top-opening | Upward-opening | Downward-opening | Bottom-opening

Side Mount Type

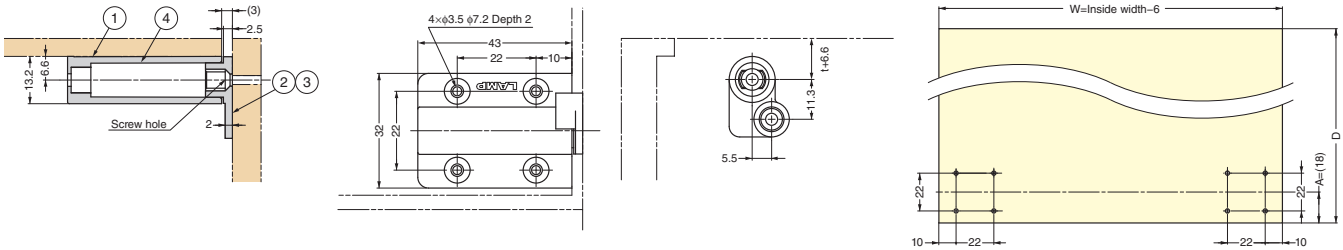

Under Mount Type

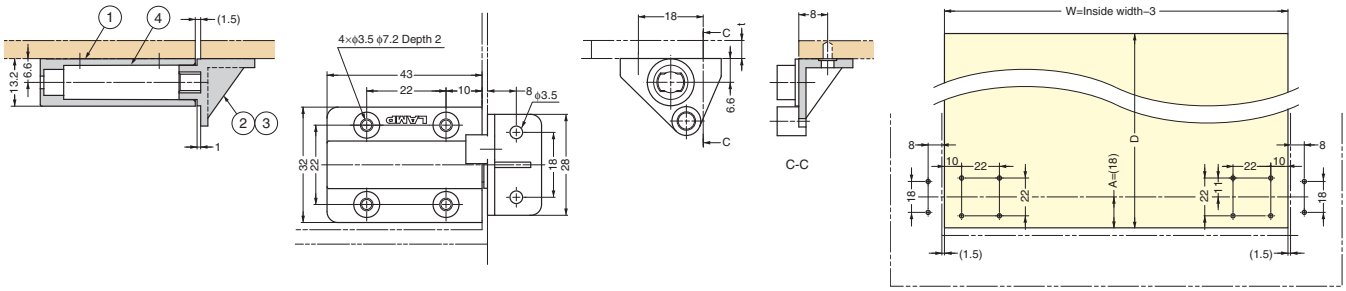

No.	Part Name	Material	Colour
①	Body	Polyacetal (POM)	Black, White
②	Bracket R	PBT	Black, White
③	Bracket L	PBT	Black, White
④	Damper	Polyacetal (POM)	–

Item Code	Item Name	Type	Colour	Torque Moment (Per pair)		Weight	Box	Carton
170-025-895	HG-JHM9-S-BL	Side Mount	Black	5.4 - 8.6 cN·m	0.55 - 0.88 kgf·cm	29 g	40 sets	440 sets
170-025-896	HG-JHM9-S-WT	Side Mount	White	5.4 - 8.6 cN·m	0.55 - 0.88 kgf·cm	29 g	40 sets	440 sets
170-025-897	HG-JHM9-U-BL	Under Mount	Black	5.4 - 8.6 cN·m	0.55 - 0.88 kgf·cm	31 g	35 sets	385 sets
170-025-898	HG-JHM9-U-WT	Under Mount	White	5.4 - 8.6 cN·m	0.55 - 0.88 kgf·cm	31 g	35 sets	385 sets
170-037-326	HG-JHM9-S4-BL	Side Mount	Black	2.7 - 4.3 cN·m	0.275 - 0.44 kgf·cm	26 g	40 sets	440 sets
170-037-327	HG-JHM9-S4-WT	Side Mount	White	2.7 - 4.3 cN·m	0.275 - 0.44 kgf·cm	26 g	40 sets	440 sets
170-037-328	HG-JHM9-U4-BL	Under Mount	Black	2.7 - 4.3 cN·m	0.275 - 0.44 kgf·cm	28 g	35 sets	385 sets
170-037-329	HG-JHM9-U4-WT	Under Mount	White	2.7 - 4.3 cN·m	0.275 - 0.44 kgf·cm	28 g	35 sets	385 sets

COMBINATION HINGE

Lapcon **HG-VH8**

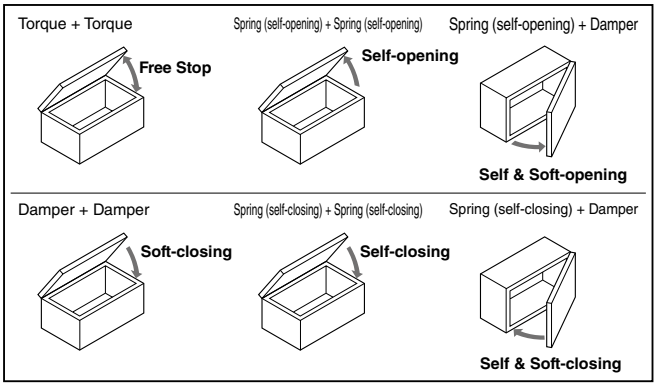

Features

- Hinges for light weight lids, doors.
- Various motions in the same appearance.
- Various combinations such as self-opening hinge + damper hinge (refer to "Possible combinations").

Remarks

- Operating temperature: 0˚C - 40˚C
- Secure to align the centre of axis horizontally when used in pairs.

Recommended Screws

Bind head machine screw M3

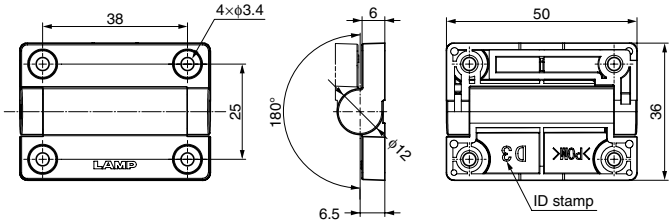

Spning equipped hinges

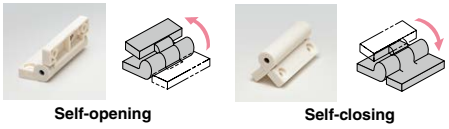

Item Code	Item Name	ID Stamp	Colour	Material	Part Built In	Torque Moment (Per piece)	Weight	Box	Carton
170-032-616	HG-VH8-N-BL	N	Black	Polyacetal (POM)	-	-	11 g	40 pcs	640 pcs
170-032-617	HG-VH8-N-WT		White				11 g	40 pcs	640 pcs
170-032-618	HG-VH8-D3-BL	D3	Black		Damper	2.2 - 3.8 cN·m (0.22 - 0.39 kgf·cm)	14 g	40 pcs	640 pcs
170-032-619	HG-VH8-D3-WT		White				14 g	40 pcs	640 pcs
170-032-620	HG-VH8-OP-BL	OP	Black		Spring (self-opening)	*increase 1.53 cN·m (0.16 kgf·cm) by 30˚ of revolution	18 g	40 pcs	640 pcs
170-032-621	HG-VH8-OP-WT		White				18 g	40 pcs	640 pcs
170-032-622	HG-VH8-CL-BL	CL	Black		Spring (self-closing)	*increase 1.53 cN·m (0.16 kgf·cm) by 30˚ of revolution	18 g	40 pcs	640 pcs
170-032-623	HG-VH8-CL-WT		White				18 g	40 pcs	640 pcs
170-032-624	HG-VH8-T15-BL	T1	Black		Torque	15±5 cN·m (1.53 kgf·cm ±0.51)	19 g	60 pcs	240 pcs
170-032-625	HG-VH8-T15-WT		White				19 g	60 pcs	240 pcs
170-032-626	HG-VH8-T35-BL	T3	Black		Torque	35±10 cN·m (3.57 kgf·cm ±1.02)	19 g	60 pcs	240 pcs
170-032-627	HG-VH8-T35-WT		White				19 g	60 pcs	240 pcs

*Spring hinge is adjustable by the screw on the edge.

Possible Combinations

Type of Hinges	ID Stamp	Normal (N)	Damper (D3)	Spring (self-opening) (OP)	Spring (self-closing) (CL)	Torque (T1)	Torque (T3)
Normal	N	○	○	○	○	○	○
Damper	D3	○	○	○	○	-	-
Spring (self-opening)	OP	○	○	○	-	△	△
Spring (self-closing)	CL	△	△	-	○	△	△
Torque	T1	○	-	△	△	○	○
Torque	T3	○	-	△	△	○	○

△Please carry out thorough tests before using since performance with these combinations might vary depending on door size and weight.

ROTARY DAMPER

Lapcon **URD8-3**

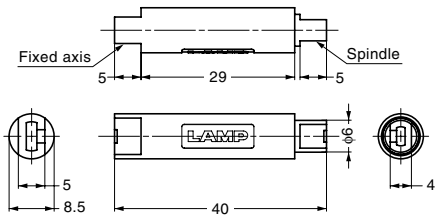

Features

- Small rotary for flaps.
- Damping in opening and closing direction.
- Opening and damping angle: unlimited.

Remarks

Bracket is required separately.

Cut Out Dimensions

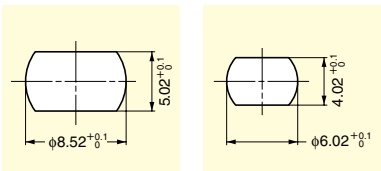

Fixed axis Spindle

Item Code	Item Name	Material	Colour	Torque Moment		Weight	Box	Carton
170-026-907	URD8-3	Polyacetal (POM)	Natural	2.2 - 3.8 cN·m	0.22 - 0.39 kgf·cm	2.5 g	20 pcs	100 pcs

DAMPER HINGE

Lapcon

HG-JHM14

Features

- Hinge with built-in damper to keep lid from slamming shut.
- Mortise and side mount type.
- Screws are concealed with the cover.
- Bracket for under mount also available (with optional parts).
- Ideal for lid of dressers and office tables.
- With marking colour on the edge to recognize the model.

Remarks

Sold in pairs.

Criterion of Door Weight

Lid Length D	Lid Weight *m*		
	HG-JHM14-S-8	HG-JHM14-S-15	HG-JHM14-S-20
150	1.04 - 1.66 kg	1.66 - 3.12 kg	3.12 - 4.16 kg
200	0.69 - 1.10 kg	1.10 - 2.07 kg	2.07 - 2.76 kg
250	0.51 - 0.82 kg	0.82 - 1.54 kg	1.54 - 2.06 kg
300	0.41 - 0.66 kg	0.66 - 1.23 kg	1.23 - 1.64 kg
350	0.34 - 0.55 kg	0.55 - 1.03 kg	1.03 - 1.37 kg

No.	Part Name	Material	Colour
①	Body	Polyacetal (POM)	Black / White
②	Bracket for side mount R	PBT	
③	Bracket for side mount L		
④	Cover	ABS	
⑤	Damper	Stainless Steel	-

Side Mount Type

When lid closed.

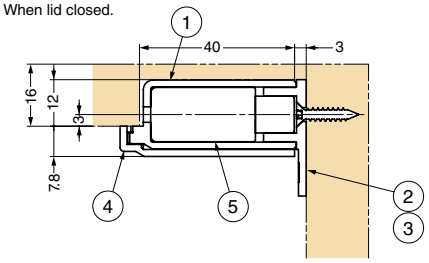

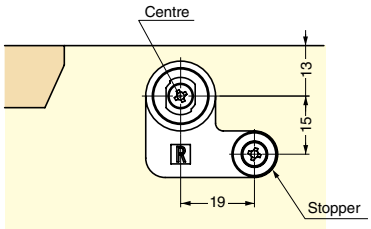

When lid opened 90 degrees.

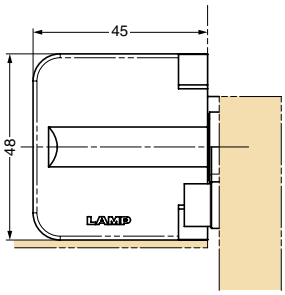

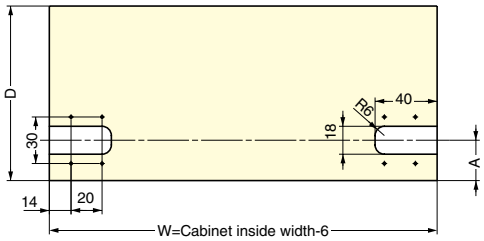

Item Code	Item Name	Colour	Torque Moment (Per pair)		Marking Colour	Weight
170-031-930	HG-JHM14-S-8BL	Black	0.5 - 0.8 N·m	5.09 - 8.15 kgf·cm	Purple	43 g
170-031-931	HG-JHM14-S-8WT	White				43 g
170-031-932	HG-JHM14-S-15BL	Black	0.8 - 1.5 N·m	8.15 - 15.29 kgf·cm	Blue	43 g
170-031-933	HG-JHM14-S-15WT	White				43 g
170-031-934	HG-JHM14-S-20BL	Black	1.5 - 2.0 N·m	15.29 - 20.39 kgf·cm	Green	43 g
170-031-935	HG-JHM14-S-20WT	White				43 g

Under Mount Type (With Optional Parts)

When lid closed.

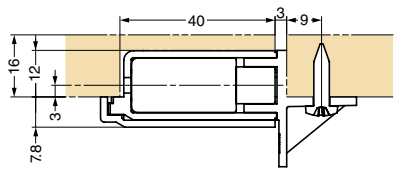

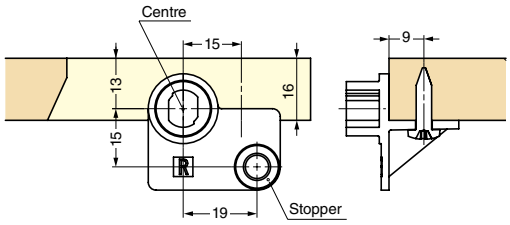

When lid opened 90 degrees.

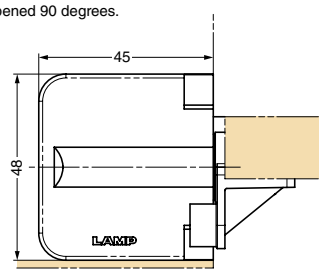

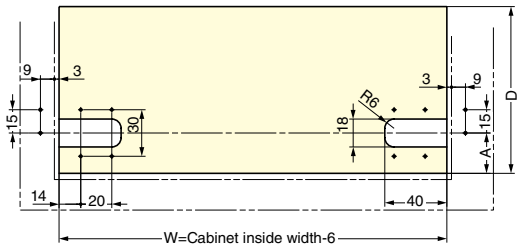

Bracket for Under Mount (Optional Parts)

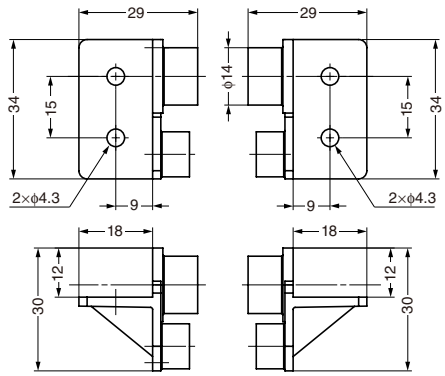

Bracket for under mount L　　Bracket for under mount R

Item Code	Item Name	Material	Colour
170-031-936	UKZ14-BL	PBT	Black
170-031-937	UKZ14-WT		White

Torque Calculation

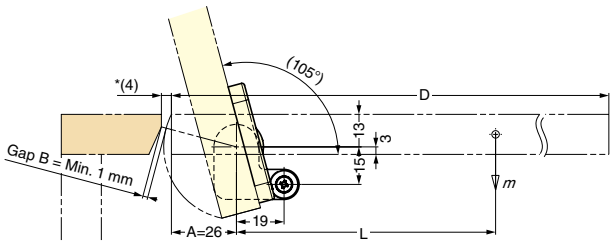

T=m × 9.8 × L

T : Maximum lid torque (N·m)

m : Lid weight (kg)

L : Distance from rotation centre to lid centre of gravity (m)

L=D/2-A

D : Lid length (m)

A : Length of lid back from rotation centre (m)

·Make sure that the gap B is Min. 1 mm.

·Provide a stopper to hold the lid at the closed position.

*In case of t = 16 mm, B = 1 mm.

DAMPER HINGE

Lapcon STEEL

HG-JHM16

W/black cover

W/white cover

Features

- Hinge with built-in damper to keep lid from slamming shut.
- Mortise mount type.
- With marking colour on the edge to recognize the model.

Remarks

Sold in pairs.

Parts Included

Countersunk head tapping screw 4×20

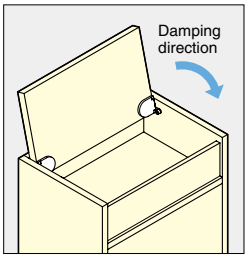

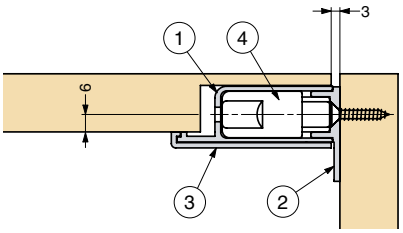

Video Link

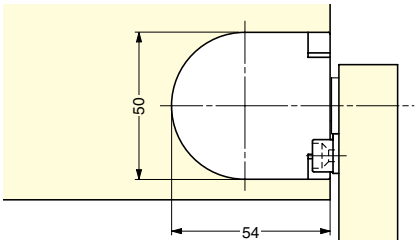

No.	Part Name	Material	Finish/Colour
①	Body	Polyacetal (POM)	Black
②	Bracket	Aluminium Alloy	Black
③	Cover	ABS	Black/White
④	Damper	–	–

Installation

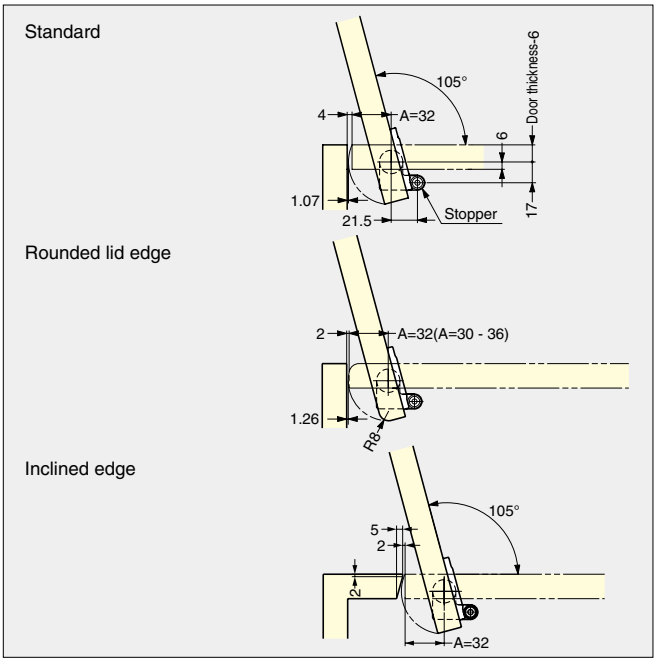

Criterion of Door Weight

Door Height D	Door Weight m	
	HG-JHM16-34	HG-JHM16-50
250	2.19 - 3.73 kg	3.73 - 5.48 kg
300	1.73 - 2.94 kg	2.94 - 4.32 kg
350	1.43 - 2.42 kg	2.42 - 3.57 kg
400	1.21 - 2.06 kg	2.06 - 3.03 kg
450	1.06 - 1.80 kg	1.80 - 2.64 kg

Calculation of Torque Moment

T = m × 9.80665 × L

T : Door torque moment (N·m)
m: Door weight (kg)
L : Length from the centre of an axis to centre of gravity (mm)

$$L = \frac{D}{2} - A$$

D : Door height (mm)
A : Length from centre of axis to back edge of the door (mm)

(Example) D=430 mm, A=32 mm, m=2.78 kg

$$T = 2.78 \times 9.80665 \times \left(\frac{430}{2} - 32\right) = 4990 \text{ (N·mm)}$$
$$= 5.0 \text{ (N·m)}$$

Cut Out Dimensions

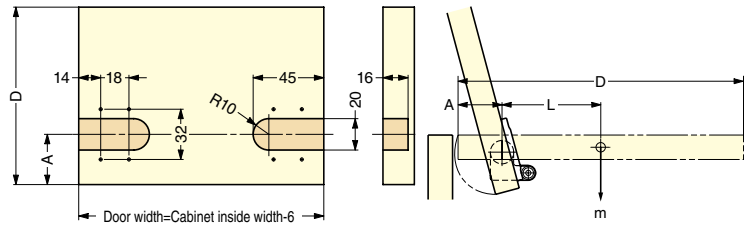

Item Code	Item Name	Colour	Torque Moment (Per pair)		Marking Colour	Weight
170-092-221	HG-JHM16-34BL	Black	2 - 3.4 N·m	20.4 - 34.7 kgf·cm	Green	126 g
170-092-222	HG-JHM16-34WT	White	2 - 3.4 N·m	20.4 - 34.7 kgf·cm	Green	126 g
170-092-223	HG-JHM16-50BL	Black	3.4- 5 N·m	34.7 - 51 kgf·cm	Black	126 g
170-092-224	HG-JHM16-50WT	White	3.4- 5 N·m	34.7 - 51 kgf·cm	Black	126 g

DAMPER HINGE

Lapcon STEEL

HG-JHM20

W/black cover

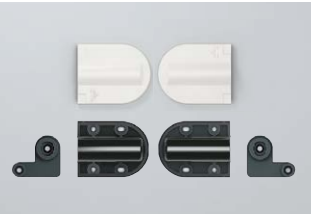

W/white cover

Features

- Hinge with built-in damper to keep lid from slamming shut.
- Mortise mount type.
- With marking colour on the edge to recognize the model.

Remarks

Sold in pairs.

Parts Included

Countersunk head tapping screw 4×20

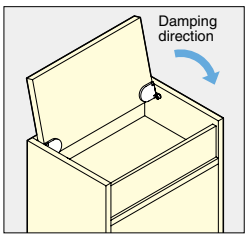

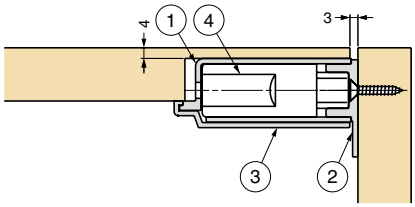

Video Link

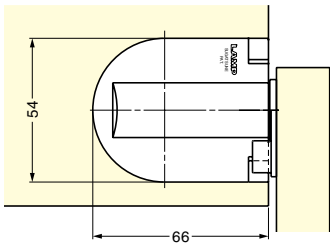

No.	Part Name	Material	Finish/Colour
①	Body	Polyacetal (POM)	Black
②	Bracket	Aluminium Alloy	Black
③	Cover	ABS	Black/White
④	Damper	–	–

Installation

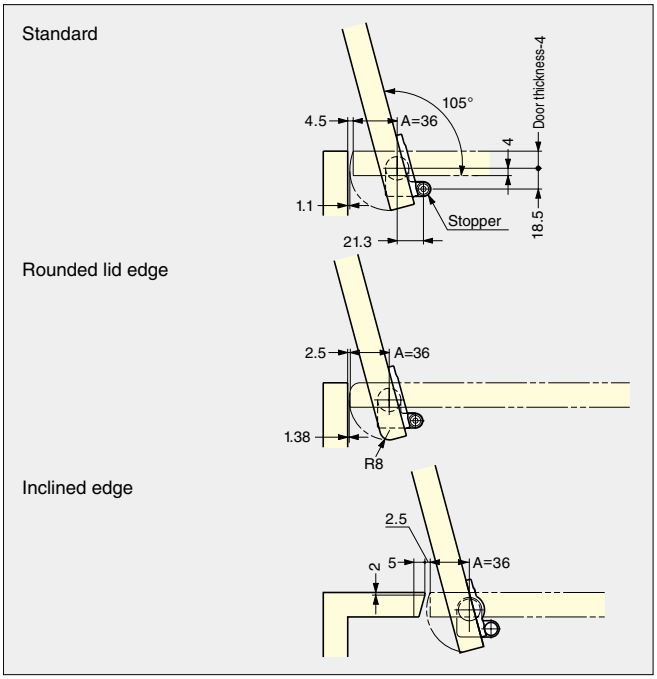

Criterion of Door Weight

Door Height D	Door Weight m
250	6.58 - 8.77 kg
300	5.18 - 6.91 kg
350	4.28 - 5.70 kg
400	3.64 - 4.86 kg
450	3.17 - 4.23 kg

Calculation of Torque Moment

T = m × 9.80665 × L

T : Door torque moment (N·m)
m: Door weight (kg)
L : Length from the centre of an axis to centre of gravity (mm)

$$L = \frac{D}{2} - A$$

D : Door Height (mm)
A : Length from centre of axis to back edge of the door (mm)

(Example) D=450 mm, A=36 mm, m=4.3 kg

$$T = 4.3 \times 9.80665 \times \left(\frac{450}{2} - 36\right) = 7970 \text{ (N·mm)}$$
$$= 8.0 \text{ (N·m)}$$

Cut Out Dimensions

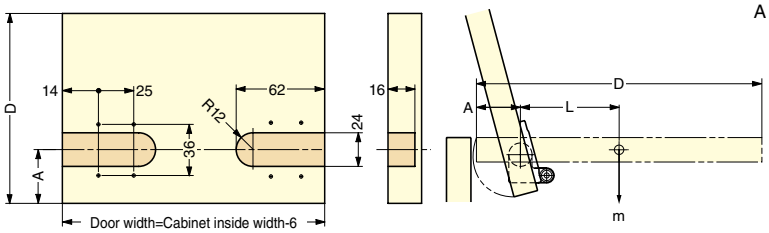

Item Code	Item Name	Colour	Torque Moment (Per pair)		Marking Colour	Weight
170-012-854	HG-JHM20-80BL	Black	6 - 8 N·m	61.2 - 81.6 kgf·cm	Yellow	206 g
170-012-855	HG-JHM20-80WT	White	6 - 8 N·m	61.2 - 81.6 kgf·cm	Yellow	206 g

STAINLESS STEEL DAMPER HINGE

Lapcon STAINLESS 304 STEEL

HG-JH14-50

Features

- Surface mount type.
- Light and smooth opening and soft closing.
- Torque moment 1.6 - 3.0 N·m type can also be produced.
- Sold in pairs.

Remarks

Door stopper is necessary for soft-close damping angle (0 - 115 degree or less).

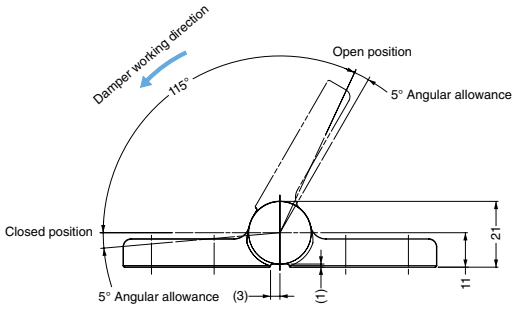

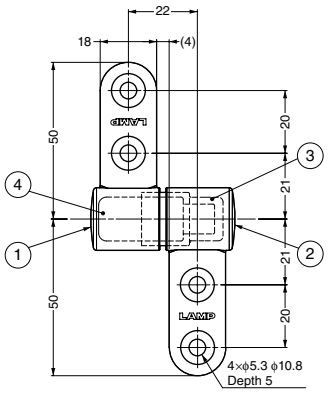

Installation

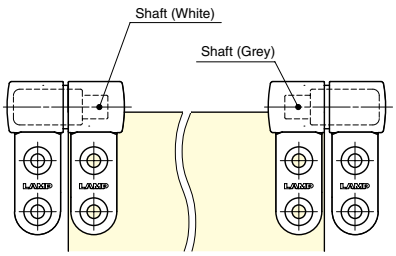

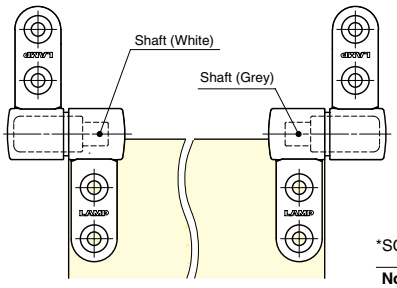

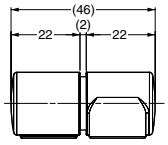

Left-hand damper shown.

*SCS13 is equivalent of SUS304.

No.	Part Name	Material	Finish/Colour
①	Bracket (L)	Stainless Steel (SCS13)	Mirror
②	Bracket (R)	Stainless Steel (SCS13)	Mirror
③	Bush	Polyacetal (POM)	White
④	Damper	Stainless Steel/PBT Resin	–

Item Code	Item Name	Torque Moment (Per pair)		Weight	Box	Carton
170-021-173	HG-JH14-50	3 - 5 N·m	30.6 - 51 kgf·cm	275 g/set	1 set	48 sets

DAMPER HINGE

Lapcon L=R

HG-JHW16S

Features

- Available with 3 different damping torques.
- Damping in opening or closing direction.
- Opening and damping angle: 0˚- 170˚.
- Successfully passed 70,000 open/close cycles in a private test.

Video Link

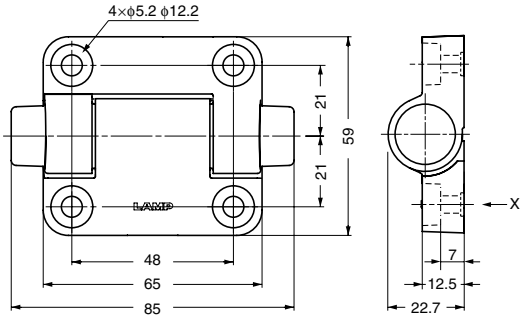

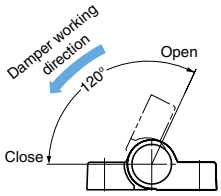

HG-JHW16S

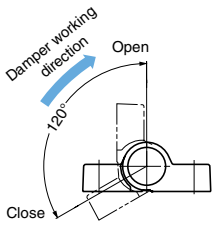

HG-JHW16SG

*These pictures of opening and closing are of a surface mount installation.

Recommended Screws

M5 screw

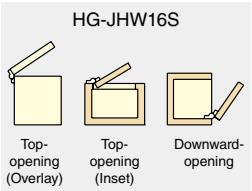

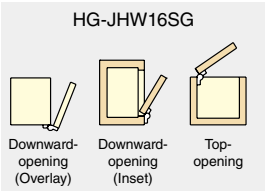

The model types can be distinguished by the mark on the back side.

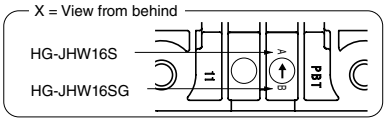

Item Code	Item Name	Damper Working Direction (When Surface Mount)	Torque Moment (Per piece)		Weight	Box
170-027-420	HG-JHW16S-34	For Closing	2.0 - 3.4 N·m	20.4 - 34.7 kgf·cm	83 g	30 pcs
170-027-421	HG-JHW16S-50	For Closing	3.4 - 5.0 N·m	34.7 - 51.0 kgf·cm	83 g	30 pcs
170-027-422	HG-JHW16S-34G	For Opening	2.0 - 3.4 N·m	20.4 - 34.7 kgf·cm	83 g	30 pcs
170-027-423	HG-JHW16S-50G	For Opening	3.4 - 5.0 N·m	34.7 - 51.0 kgf·cm	83 g	30 pcs
170-027-419	HG-JHW16S-00	Without Damper	-	-	52 g	30 pcs

Material	Finish/Colour
PBT	Dark Grey

DAMPER HINGE

HG-JH

Features

- Soft-close damper keeps lid from slamming shut.
- Surface mount type.
- Caps can be removable, so it can be used for right side or left side.
- With marking colour on the edge to recognize the model.

Remarks

- Sold in pairs.
- Please install door stopper for soft-close damping angle (0 - 115 degree or less).

Installation

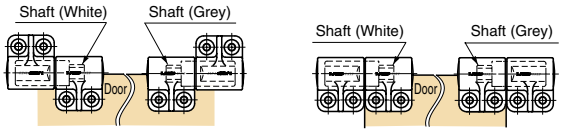

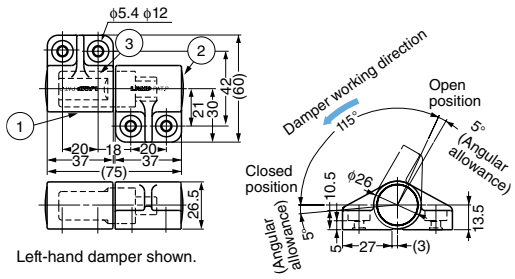

Left-hand damper shown.

No.	Part Name	Material	Finish/Colour
①	Bracket	PBT Resin/Zinc Alloy (ZDC)	Dark Grey
②	Cover	Polypropylene (PP)	Dark Grey
③	Damper	Stainless Steel	-

Item Code	Item Name	Torque Moment (Per pair)		Marking Colour	Weight	Box	Carton
170-092-209	HG-JH25	3 - 5 N·m	30.6 - 51 kgf·cm	Blue	200 g	4 sets	64 sets
170-092-210	HG-JH35	5 - 7 N·m	51 - 71.4 kgf·cm	Red	200 g	4 sets	64 sets

DAMPER HINGE

HG-JHW, HG-JHWG

HG-JHW

HG-JHWG

Features

- Soft-close damper keeps lid from slamming shut.
- Surface mount type.
- With marking colour on the edge to recognize the model.

Remarks

Install door stopper for soft-close damping angle (0 - 115 degree or less).

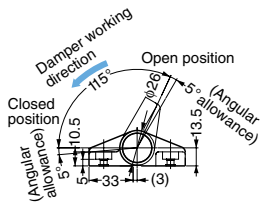

HG-JHW

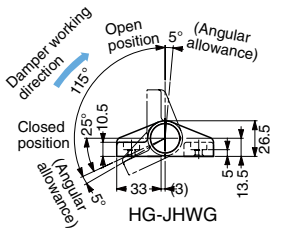

HG-JHWG

HG-JHW

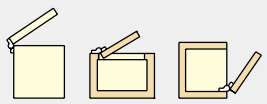

HG-JHWG

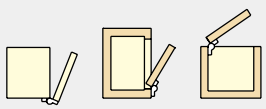

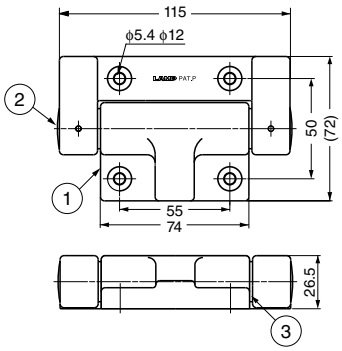

No.	Part Name	Material	Finish/Colour
①	Bracket	PBT Resin/Zinc Alloy (ZDC)	Dark Grey
②	Cover	Polypropylene (PP)	Dark Grey
③	Damper	Stainless Steel	-

Item Code	Item Name	Damper Working Direction When External Installation	Torque Moment (Per pair)		Marking Colour	Weight	Box	Carton
170-092-212	HG-JHW50	For Closing	3 - 5 N·m	30.6 - 51 kgf·cm	White	184 g	4 pcs	64 pcs
170-092-211	HG-JHW70	For Closing	5 - 7 N·m	51 - 71.4 kgf·cm	Without	184 g	4 pcs	64 pcs
170-092-215	HG-JHW50G	For Opening	3 - 5 N·m	30.6 - 51 kgf·cm	White·Red	184 g	4 pcs	64 pcs
170-092-216	HG-JHW70G	For Opening	5 - 7 N·m	51 - 71.4 kgf·cm	Red	184 g	4 pcs	64 pcs

TORQUE HINGE DIGEST

Features

- Can be hold lids in any desired position.
- You can choose suitable one from our wide range of torque hinges.

Torque Calculation

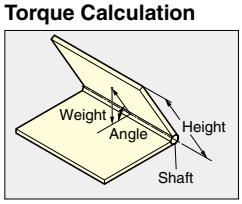

Torque moment T (N·m)=Door weight (kg)×9.8×Length from pivot point to the centre of gravity. (m)

- In case the door has its centre of gravity positioned the centre of door.

$$T\ (N{\cdot}m) = \text{Door weight (kg)} \times 9.8 \times \frac{\text{Door Height (m)}}{2}$$

Item Name	Torque Moment (Per piece)		Page
	N·m	kgf·cm	
HG-MF08-BL (WT)	0.0784±25%	0.8±25%	P.431
HG-MF15-BL (WT)	0.147±33%	1.5±33%	
HG-MF25-BL (WT)	0.245±33%	2.5±33%	
HG-DTA4-R (L)	0.4±20%	4.08±20%	P.435
HG-DTA8-R (L)	0.8±20%	8.16±20%	
HG-DTB4-R (L)	0.4±20%	4.08±20%	P.435
HG-DTB8-R (L)	0.8±20%	8.16±20%	
HG-TS03	0.35–20% - +40%	3.6–20% - +40%	P.432
HG-TS07	0.7–20% - +40%	7.1–20% - +40%	
HG-TS15	1.5–20% - +40%	15.3–20% - +40%	
SK-T-ZA-1SCR (CR)	2.94±15%	30±15%	P.431
SK-T-ZA-2SCR (CR)	1.96±15%	20±15%	
SK-T-ZA-3SCR (CR)	1.47±15%	15±15%	
HG-ITS25	2.5±20%	25.49±20%	P.433
HG-ITS35	3.5±20%	35.69±20%	
HG-ITM50	5.0±20%	50.98±20%	
HG-ITM70	7.0±20%	71.38±20%	
HG-TA20R (L)	2.0±20%	20.4±20%	P.434
HG-TA30R (L)	3.0±20%	30.6±20%	
HG-TA45R (L)	4.5±20%	45.9±20%	
HG-TB7R (L)	0.7±20%	7.1±20%	P.434
HG-TB20R (L)	2.0±20%	20.4±20%	
HG-TB30R (L)	3.0±20%	30.6±20%	
HG-TB45R (L)	4.5±20%	45.9±20%	
HG-T30S15	Tilt: 3.0±20% Swivel: 1.5±20%	Tilt: 30.6±20% Swivel: 15.3±20%	P.438
HG-T70S30	Tilt: 7.0±20% Swivel: 3.0±20%	Tilt: 71.4±20% Swivel: 30.6±20%	P.438
HG-TQA90-A (B)	4.5–20% - +40%	45.9–20% - +40%	P.445
HG-TQJ100-A (B)	0 - 10	0 - 102	P.444
HG-S7	0.7±20%	7.1±20%	P.439
HG-S20	2.0±20%	20.4±20%	
HG-S30	3.0±20%	30.6±20%	P.439, P.441
HG-S50	5.0±20%	51.0±20%	
HG-S70	7.0±20%	71.4±20%	
HG-S100	10.0±20%	102.0±20%	
HG-TU03	0.35–20% - +40%	3.6–20% - +40%	P.432
HG-TU07	0.7–20% - +40%	7.1–20% - +40%	
HG-RNM30	1.5±20%	15.3±20%	P.442
HG-ITJ4080	4 - 8±20%	41 - 82±20%	P.443

Torque Range

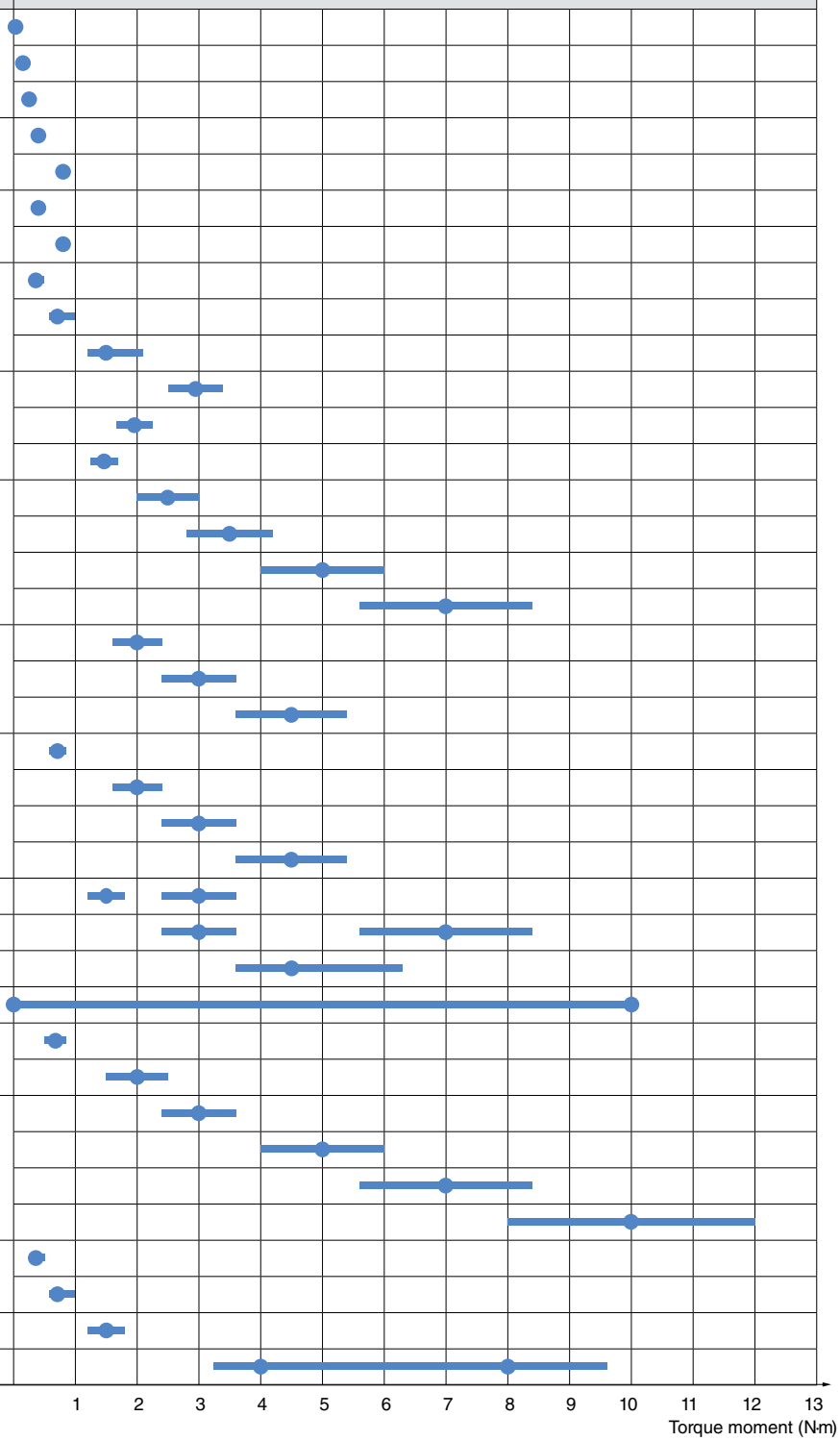

MINI TORQUE HINGE

L=R **HG-MF**

Features

- Hinge with friction torque holds lid/door in desired position.
- Successfully passed 20,000 open/close cycles in a private test.

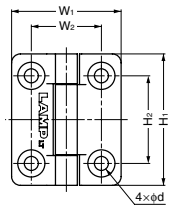

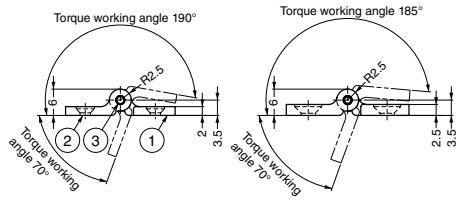

HG-MF08, HG-MF15 HG-MF25

Application Example

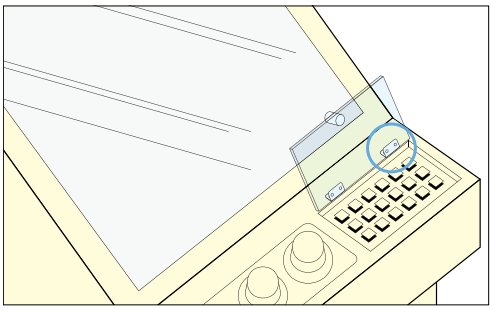

No.	Part Name	Material	Colour
①	Body A	Polyacetal (POM)	Black, White
②	Body B	Polyacetal (POM)	Black, White
③	Shaft	Stainless Steel (SUS304)	-

Item Code	Item Name	Colour	W_1	W_2	H_1	H_2	t	d	Torque Moment (Per piece)		Weight	Box
170-023-854	HG-MF08-BL	Black	25	16	20	10	2	ϕ2.4, ϕ4.2	$7.84^{\pm25\%}$ cN·m	$0.8^{\pm25\%}$ kgf·cm	2 g	300 pcs
170-023-855	HG-MF08-WT	White	25	16	20	10	2	ϕ2.4, ϕ4.2	$7.84^{\pm25\%}$ cN·m	$0.8^{\pm25\%}$ kgf·cm	2 g	300 pcs
170-023-856	HG-MF15-BL	Black	25	16	30	20	2	ϕ3.2, ϕ6.2	$14.7^{\pm33\%}$ cN·m	$1.5^{\pm33\%}$ kgf·cm	3 g	200 pcs
170-023-857	HG-MF15-WT	White	25	16	30	20	2	ϕ3.2, ϕ6.2	$14.7^{\pm33\%}$ cN·m	$1.5^{\pm33\%}$ kgf·cm	3 g	200 pcs
170-023-858	HG-MF25-BL	Black	28	18	40	25	2.5	ϕ3.2, ϕ6.2	$24.5^{\pm33\%}$ cN·m	$2.5^{\pm33\%}$ kgf·cm	5 g	100 pcs
170-023-859	HG-MF25-WT	White	28	18	40	25	2.5	ϕ3.2, ϕ6.2	$24.5^{\pm33\%}$ cN·m	$2.5^{\pm33\%}$ kgf·cm	5 g	100 pcs

TORQUE HINGE

L=R **SK-T-ZA**

Features

- Can be used horizontal applications.
- Plastic cover provided for clean appearance.

Remarks

Recommended for use in pairs.

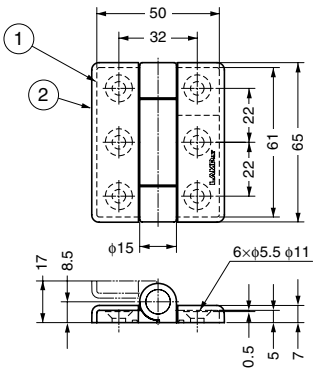

No.	Part Name	Material	Finish
①	Body	Zinc Alloy (ZDC)	Satin Chrome, Chrome
②	Cover	ABS	Satin Chrome, Chrome

Item Code	Item Name	Finish	Torque Moment (Per piece)		Weight	Box	Carton
170-090-797	SK-T-ZA-1SCR	Satin Chrome	$2.94^{\pm15\%}$ N·m	$30^{\pm15\%}$ kgf·cm	134 g	20 pcs	120 pcs
170-090-799	SK-T-ZA-2SCR	Satin Chrome	$1.96^{\pm15\%}$ N·m	$20^{\pm15\%}$ kgf·cm	134 g	20 pcs	120 pcs
170-090-801	SK-T-ZA-3SCR	Satin Chrome	$1.47^{\pm15\%}$ N·m	$15^{\pm15\%}$ kgf·cm	134 g	20 pcs	120 pcs
170-090-796	SK-T-ZA-1CR	Chrome	$2.94^{\pm15\%}$ N·m	$30^{\pm15\%}$ kgf·cm	134 g	20 pcs	120 pcs
170-090-798	SK-T-ZA-2CR	Chrome	$1.96^{\pm15\%}$ N·m	$20^{\pm15\%}$ kgf·cm	134 g	20 pcs	120 pcs
170-090-800	SK-T-ZA-3CR	Chrome	$1.47^{\pm15\%}$ N·m	$15^{\pm15\%}$ kgf·cm	134 g	20 pcs	120 pcs

*Limited stock available. Please contact your vendor.

TORQUE HINGE

STAINLESS 304 STEEL

HG-TS

Features

- Hinge has free-stop between 0 - 180˚: It holds its position at any desired angle
- Grease free
- Successfully passed 20,000 open/close cycles in a private test.
- Simplified internal structure
- Initial torque may vary -20 % - +40 %.

Remarks

- Operating temperature : -10˚ - 50˚
- Operating humidity : 90 % RH or less
- Recommended for use in pairs.

HG-TS03

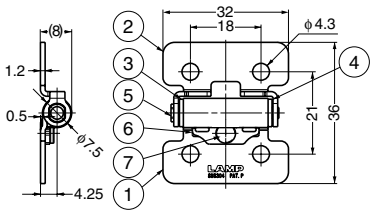

HG-TS07

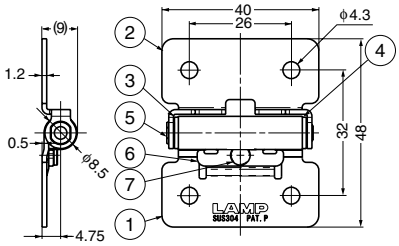

HG-TS15

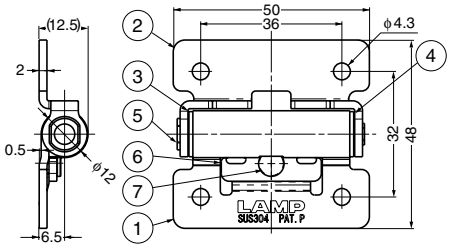

Item Code	Item Name	Torque Moment (Per pair)		Weight	Box	Carton
170-018-501	HG-TS03	0.35 $^{+40\%}_{-20\%}$ N·m	3.6 $^{+40\%}_{-20\%}$ kgf·cm	15.0 g	50 pcs	500 pcs
170-018-502	HG-TS07	0.7 $^{+40\%}_{-20\%}$ N·m	7.1 $^{+40\%}_{-20\%}$ kgf·cm	27.5 g	50 pcs	500 pcs
170-018-503	HG-TS15	1.5 $^{+40\%}_{-20\%}$ N·m	15.3 $^{+40\%}_{-20\%}$ kgf·cm	64.1 g	20 pcs	200 pcs

No.	Part Name	Material	Finish/Colour
①	Body	Stainless Steel (SUS304)	Mirror
②	Base	Stainless Steel (SUS304)	Mirror
③	Fixing Tube L	Polyacetal (POM)	Black
④	Fixing Tube R	Polyacetal (POM)	Black
⑤	Shaft	Stainless Steel (SUS303)	-
⑥	Press Washer	Stainless Steel (SUS304)	Mirror
⑦	Pin	Stainless Steel	-

TORQUE HINGE (CONCEALED)

L=R STAINLESS 304 STEEL

HG-TU

Features

- Hinge has free stop: It holds its position at any desired angle
- Grease free
- Successfully passed 20,000 open/close cycles in a private test.
- Install on the back side of flap doors or doors for a clean appearance.
- Can be used in either horizontal and vertical applications.

Remarks

Recommended for use in pairs.

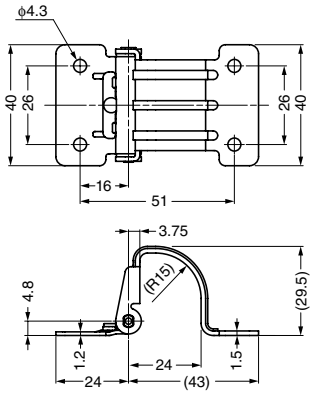

Installation

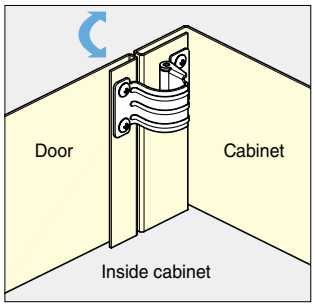

Dimension

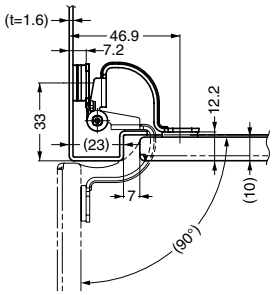

Application Example

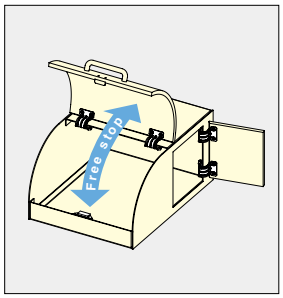

Item Code	Item Name	Material	Finish	Torque Moment (Per piece)		Weight	Box	Carton
170-022-304	HG-TU03	Stainless Steel (SUS304)	Mirror	0.35 $^{+40\%}_{-20\%}$ N·m	3.6 $^{+40\%}_{-20\%}$ kgf·cm	50 g	20 pcs	200 pcs
170-022-305	HG-TU07	Stainless Steel (SUS304)	Mirror	0.7 $^{+40\%}_{-20\%}$ N·m	7.1 $^{+40\%}_{-20\%}$ kgf·cm	50 g	20 pcs	200 pcs

TORQUE HINGE

STAINLESS 304 STEEL

HG-IT

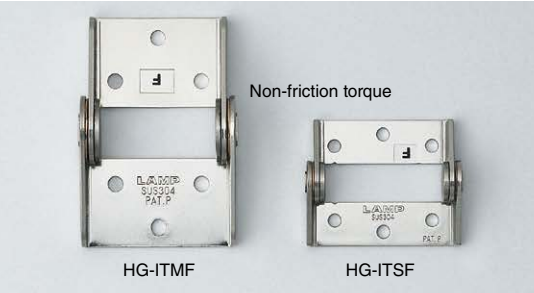

Features

- Hinge has free stop: It holds its position at any desired angle
- Successfully passed 20,000 open/close cycles in a private test.
- Optional cover available for a clean appearance.
- Torque free type also available (HG-ITSF, HG-ITMF)
- When using several hinges, by using a combination of torque and torque free types, the torque strength can be adjusted.

Remarks

- Operating angle: HG-ITM…193˚/HG-ITS…190˚
- Operating temperature : -10˚ - 50˚

Video Link

Caution

Recommended for use in pairs.

Sold Separately

Cover (Below)

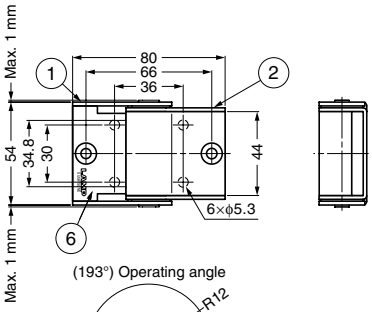

HG-ITM
(With cover)

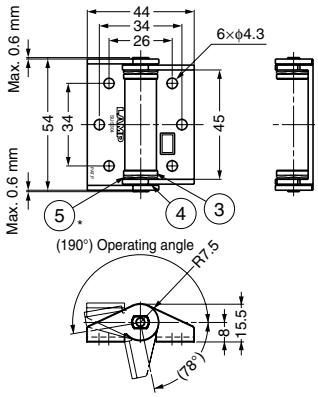

HG-ITS
(Without cover)

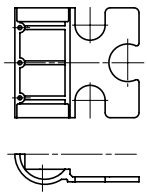

Cover A

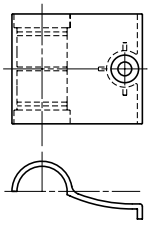

Cover B

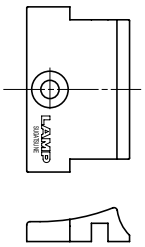

Cover C

Installation

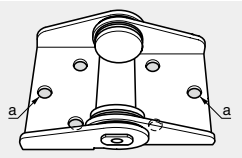

1. Install hinge body to the cabinet. (screw hole "a" is for cover)

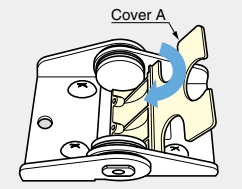

2. Insert the cover A under the hinge axis.

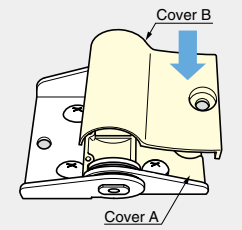

3. Put cover B on the cover A.

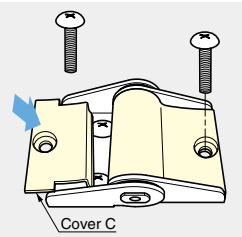

4. Put cover C as the left figure and fix with screw.

No.	Part Name	Material	Finish/Colour
①	Base	Stainless Steel (SUS304)	Mirror
②	Bracket	Stainless Steel (SUS304)	Mirror
③	Shaft	Stainless Steel (SUS303)	Plain
④	Washer	Bronze	Mirror
⑤	Spring Washer	Steel	Nickel
⑥	Cover	ABS	Matte Silver/Clear

*⑤: Only for HG-ITS and HG-ITM.

Hinge

Item Code	Item Name	Torque Moment (Per piece)		Weight	Box	Carton
170-090-106	HG-ITS25	$2.5^{\pm20\%}$ N·m	$25.49^{\pm20\%}$ kgf·cm	50 g	20 pcs	160 pcs
170-090-115	HG-ITS35	$3.5^{\pm20\%}$ N·m	$35.69^{\pm20\%}$ kgf·cm	50 g	20 pcs	160 pcs
170-090-114	HG-ITM50	$5.0^{\pm20\%}$ N·m	$50.98^{\pm20\%}$ kgf·cm	130 g	10 pcs	80 pcs
170-090-113	HG-ITM70	$7.0^{\pm20\%}$ N·m	$71.38^{\pm20\%}$ kgf·cm	130 g	10 pcs	80 pcs
170-090-999	HG-ITSF	–	–	50 g	20 pcs	160 pcs
170-090-998	HG-ITMF	–	–	130 g	10 pcs	80 pcs

Cover (Sold Separately)

Item Code	Item Name	Cover for	Weight	Box	Carton
170-091-002	HG-ITSC	HG-ITS Type	10 g	40 pcs	960 pcs
170-091-001	HG-ITMC	HG-ITM Type	18 g	20 pcs	480 pcs

TORQUE HINGE

STAINLESS 430 STEEL

HG-TA

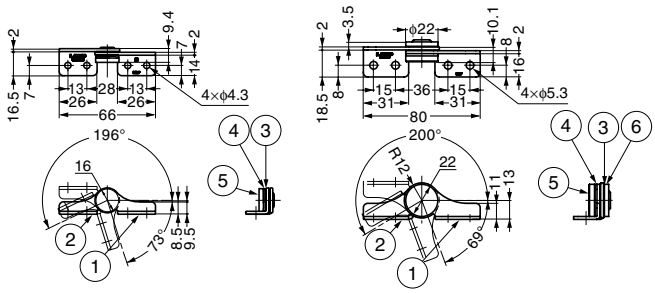

Left-handed type shown.

Remarks

- Operating temperature : 0˚ - 40˚
- For pair using: Please use the same torque moment in both hinges.

Video Link

Application Example

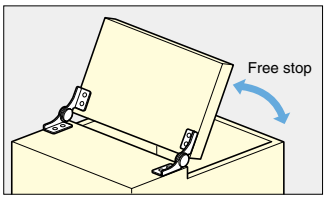

No.	Part Name	Material	Finish
①	Body	Stainless Steel (SUS430)	Mirror
②	Base	Stainless Steel (SUS430)	Mirror
③	Plate	Bronze	–
④	Spring Washer	Steel	–
⑤	Shaft	Stainless Steel (SUS303)	–
⑥	Washer	Stainless Steel (SUS303)	Mirror

*HG-TA45: ③×2pcs

Item Code	Item Name	Type	Torque Moment		Weight	Box	Carton
170-012-403	HG-TA20R	Right	2.0±20% N·m	20.4±20% kgf·cm	33 g	40 pcs	320 pcs
170-012-404	HG-TA20L	Left	2.0±20% N·m	20.4±20% kgf·cm	33 g	40 pcs	320 pcs
170-012-405	HG-TA30R	Right	3.0±20% N·m	30.6±20% kgf·cm	33 g	40 pcs	320 pcs
170-012-406	HG-TA30L	Left	3.0±20% N·m	30.6±20% kgf·cm	33 g	40 pcs	320 pcs
170-012-407	HG-TA45R	Right	4.5±20% N·m	45.9±20% kgf·cm	65 g	20 pcs	160 pcs
170-012-408	HG-TA45L	Left	4.5±20% N·m	45.9±20% kgf·cm	65 g	20 pcs	160 pcs

TORQUE HINGE

STAINLESS 430 STEEL

HG-TB

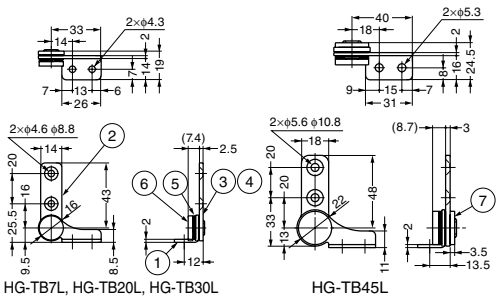

Left-handed type shown.

Remarks

- Operating temperature : 0˚ - 40˚
- Operating angle : 360˚
- For pair using: Please use the same torque moment in both hinges.

Video Link

Application Example

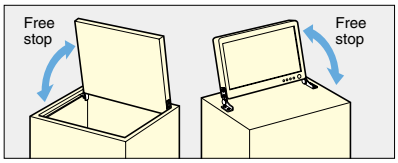

No.	Part Name	Material	Finish
①	Body	Stainless Steel (SUS430)	Mirror
②	Base	Stainless Steel (SUS430)	Mirror
③	Plate A	Bronze	–
④	Plate B	Bronze	–
⑤	Spring Washer	Steel	–
⑥	Shaft	Stainless Steel (SUS303)	–
⑦	Washer	Stainless Steel (SUS303)	Mirror

*HG-TB45: ③×2pcs

Item Code	Item Name	Type	Torque Moment		Weight	Box	Carton
170-022-142	HG-TB7R	Right	0.7±20% N·m	7.1±20% kgf·cm	31 g	40 pcs	320 pcs
170-022-143	HG-TB7L	Left	0.7±20% N·m	7.1±20% kgf·cm	31 g	40 pcs	320 pcs
170-012-413	HG-TB20R	Right	2.0±20% N·m	20.4±20% kgf·cm	32 g	40 pcs	320 pcs
170-012-414	HG-TB20L	Left	2.0±20% N·m	20.4±20% kgf·cm	32 g	40 pcs	320 pcs
170-012-415	HG-TB30R	Right	3.0±20% N·m	30.6±20% kgf·cm	32 g	40 pcs	320 pcs
170-012-416	HG-TB30L	Left	3.0±20% N·m	30.6±20% kgf·cm	32 g	40 pcs	320 pcs
170-012-417	HG-TB45R	Right	4.5±20% N·m	45.9±20% kgf·cm	67 g	20 pcs	160 pcs
170-012-418	HG-TB45L	Left	4.5±20% N·m	45.9±20% kgf·cm	67 g	20 pcs	160 pcs

DETENT TORQUE HINGE

STAINLESS 304 STEEL

HG-DTA

Features

- Has free-stop: holds position at any angle.
- Detent function prevents spring-back in closed position.
- No additional catch needed.
- All stainless steel body provides corrosion resistance.

Video Link

Remarks

- For pair using: Please use the same torque moment in both hinges.
- Becomes torque-free right before closing to prevent spring-back.

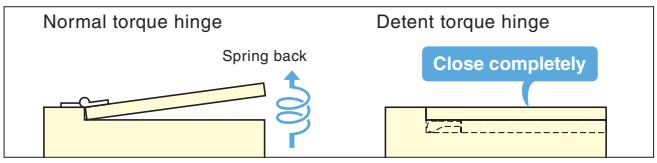

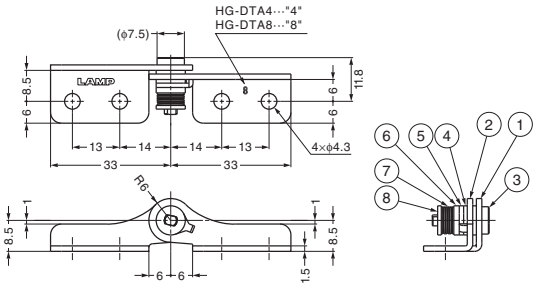

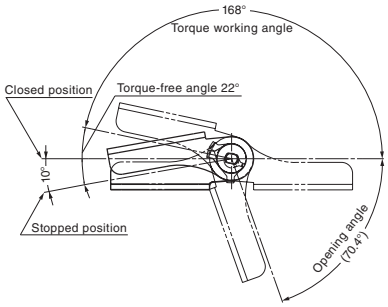

HG-DTA4/8-L

No.	Part Name	Material	Finish
①	Body	Stainless Steel (SUS304)	Mirror
②	Bracket	Stainless Steel (SUS304)	Mirror
③	Shaft	Stainless Steel (SUS303)	–
④	Washer	Stainless Steel	–
⑤	Cam A	Stainless Steel	–
⑥	Cam B	Stainless Steel	–
⑦	Spring Washer	Stainless Steel	–
⑧	Plate	Stainless Steel (SUS304)	–

Item Code	Item Name	Type	Torque Moment (Per piece)		Release Torque *		Weight	Box	Carton
170-026-457	HG-DTA4-R	Right	0.4±20% N·m	4.08±20% kgf·cm	0.7±20% N·m	7.14±20% kgf·cm	19 g	50 pcs	400 pcs
170-026-458	HG-DTA4-L	Left	0.4±20% N·m	4.08±20% kgf·cm	0.7±20% N·m	7.14±20% kgf·cm	19 g	50 pcs	400 pcs
170-026-459	HG-DTA8-R	Right	0.8±20% N·m	8.16±20% kgf·cm	1.5±20% N·m	15.31±20% kgf·cm	19 g	50 pcs	500 pcs
170-026-460	HG-DTA8-L	Left	0.8±20% N·m	8.16±20% kgf·cm	1.5±20% N·m	15.31±20% kgf·cm	19 g	50 pcs	500 pcs

*Torque required to release detent.

DETENT TORQUE HINGE

STAINLESS 304 STEEL

HG-DTB

Features

- Has free-stop: holds position at any angle.
- Detent function prevents spring-back in closed position.
- No additional catch needed.
- All stainless steel body provides corrosion resistance.

Video Link

Remarks

- For pair using: Please use the same torque moment in both hinges.
- Becomes torque-free right before closing to prevent spring-back.

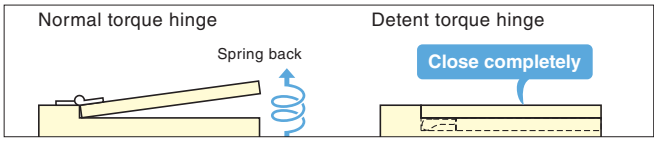

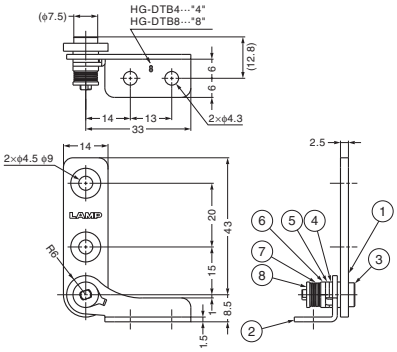

Application Example

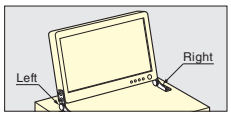

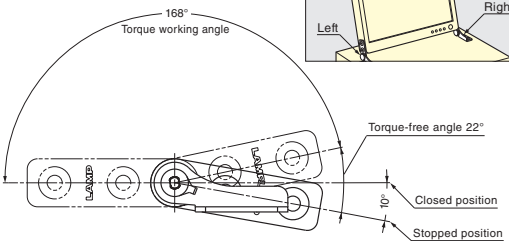

HG-DTB4/8-L

No.	Part Name	Material	Finish
①	Body	Stainless Steel (SUS304)	Mirror
②	Bracket	Stainless Steel (SUS304)	Mirror
③	Shaft	Stainless Steel (SUS303)	–
④	Washer	Stainless Steel	–
⑤	Cam A	Stainless Steel	–
⑥	Cam B	Stainless Steel	–
⑦	Spring Washer	Stainless Steel	–
⑧	Plate	Stainless Steel (SUS304)	–

Item Code	Item Name	Type	Torque Moment (Per piece)		Release Torque *		Weight	Box	Carton
170-026-461	HG-DTB4-R	Right	0.4±20% N·m	4.08±20% kgf·cm	0.7±20% N·m	7.14±20% kgf·cm	23 g	50 pcs	400 pcs
170-026-462	HG-DTB4-L	Left	0.4±20% N·m	4.08±20% kgf·cm	0.7±20% N·m	7.14±20% kgf·cm	23 g	50 pcs	400 pcs
170-026-463	HG-DTB8-R	Right	0.8±20% N·m	8.16±20% kgf·cm	1.5±20% N·m	15.31±20% kgf·cm	23 g	50 pcs	500 pcs
170-026-464	HG-DTB8-L	Left	0.8±20% N·m	8.16±20% kgf·cm	1.5±20% N·m	15.31±20% kgf·cm	23 g	50 pcs	500 pcs

*Torque required to release detent.

TORQUE HINGE

STAINLESS 430 STEEL

HG-TA45H

Features

- Has free-stop: holds position at any angle.
- Hole in the shaft allows cables to be passed through for easy cable management.
- Great solution for mounting LCD screens and monitoring devices.
- Successfully passed 50,000 open/close private cycle tests with a cable threaded through the shaft.

Remarks

- Operating temperature: 0˚ - 40˚
- For pair using: Please use the same torque moment in both hinges.

Application Example

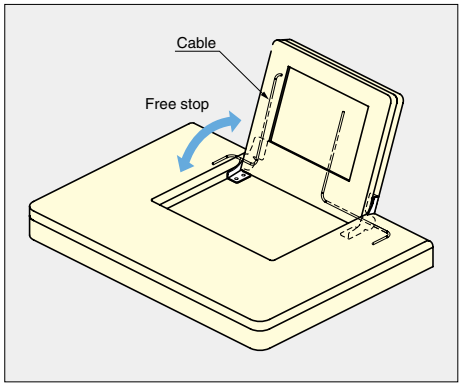

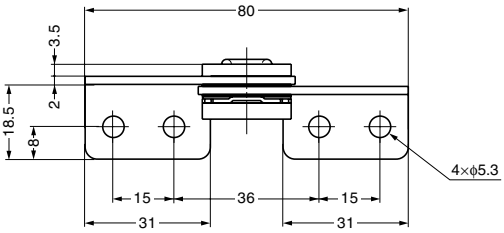

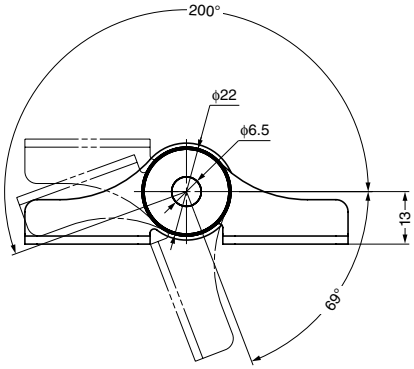

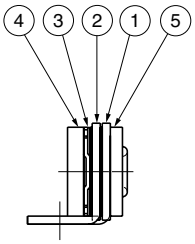

HG-TA45HL

No.	Part Name	Material	Finish
①	Bracket	Stainless Steel (SUS430)	Mirror
②	Base		
③	Plate	Steel	-
④	Shaft	Stainless Steel (SUS303)	
⑤	Washer	Stainless Steel (SUS430)	Mirror

Item Code	Item Name	Type	Torque Moment (Per piece)	Weight	Box	Carton
170-034-215	HG-TA45HR	Right/Wiring Hole	$4.5^{\pm 20\%}$N·m ($45.9^{\pm 20\%}$kgf·cm)	60 g	20 pcs	160 pcs
170-034-216	HG-TA45HL	Left/Wiring Hole				

TORQUE HINGE

STAINLESS 430 STEEL

HG-TC45H

Features

- Has free-stop: holds position at any angle.
- Hole in the shaft allows cables to be passed through for easy cable management.
- Great solution for mounting LCD screens and monitoring devices.
- Successfully passed 50,000 open/close private cycle tests.

Remarks

- Operating temperature: 0˚ - 40˚
- For pair using: Please use the same torque moment in both hinges.

Application Example

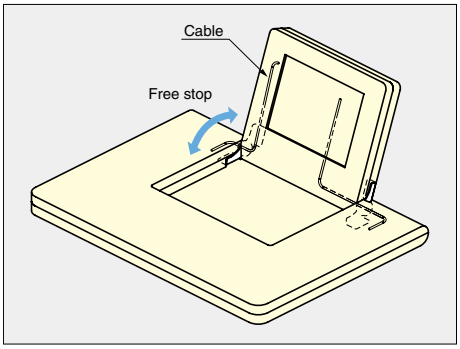

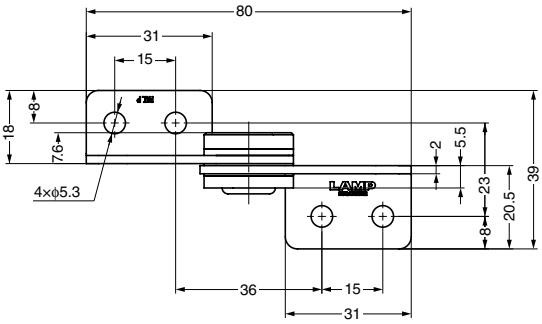

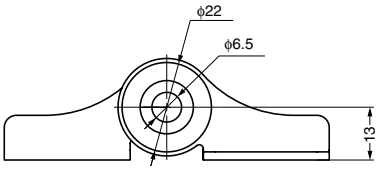

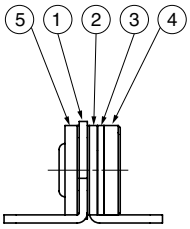

HG-TC45HL

No.	Part Name	Material	Finish
①	Bracket	Stainless Steel (SUS430)	Mirror
②	Base		
③	Plate	Steel	-
④	Shaft	Stainless Steel (SUS303)	
⑤	Washer	Stainless Steel (SUS430)	Mirror

Item Code	Item Name	Type	Torque Moment (Per piece)	Weight	Box	Carton
170-034-217	HG-TC45HR	Right/Wiring Hole	$4.5^{\pm20\%}$N·m ($45.9^{\pm20\%}$kgf·cm)	60 g	20 pcs	160 pcs
170-034-218	HG-TC45HL	Left/Wiring Hole				

HINGES

TORQUE HINGE

TORQUE HINGE (DUAL AXIS)

STAINLESS 430 STEEL

HG-T30S15

Features

- Dual axis: can both tilt and rotate.
- Free stop: can hold position at any rotation angle or degree of tilt.
- Can fully rotate 360°.
- Successfully passed 20,000 cycles for both tilting and rotation in a private test.
- Provides torque stability in both directions.
- Easy surface installation.

Video Link

Remarks

- Operating temperature : 0˚ - 40˚
- Suitable for monitor screen.

Application Example

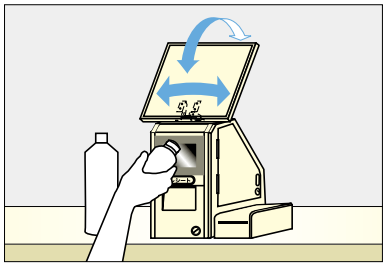

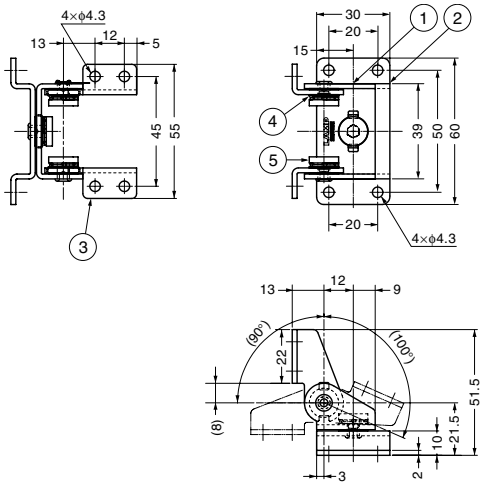

No.	Part Name	Material	Finish
①	Base	Stainless Steel (SUS430)	Mirror
②	Base Plate	Stainless Steel (SUS430)	Mirror
③	Bracket	Stainless Steel (SUS430)	Mirror
④	Plate	Steel	-
⑤	Shaft	Stainless Steel (SUS303)	-

Item Code	Item Name	Torque Moment (Tilting)		Torque Moment (Swiveling)		Weight	Box	Carton
170-020-826	HG-T30S15	3.0±20% N·m	30.6±20% kgf·cm	1.5±20% N·m	15.3±20% kgf·cm	87 g	12 pcs	96 pcs

TORQUE HINGE (DUAL AXIS)

STAINLESS 430 STEEL

HG-T70S30

Features

- Dual axis: can both tilt and rotate.
- Free stop: can hold position at any rotation angle or degree of tilt.
- Can fully rotate 360°.
- Successfully passed 20,000 cycles for both tilting and rotation in a private test.
- Provides torque stability in both directions.
- Degree of rotation can be constrained by using screws or pins.

Video Link

Remarks

- Operating temperature : 0˚ - 40˚
- Suitable for monitor screen.

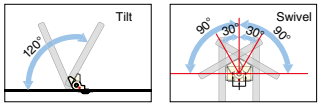

Application Example

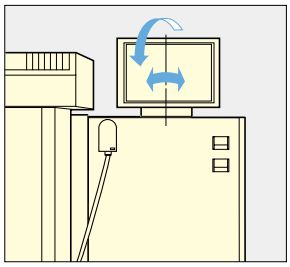

Cut Out Dimensions

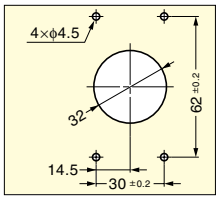

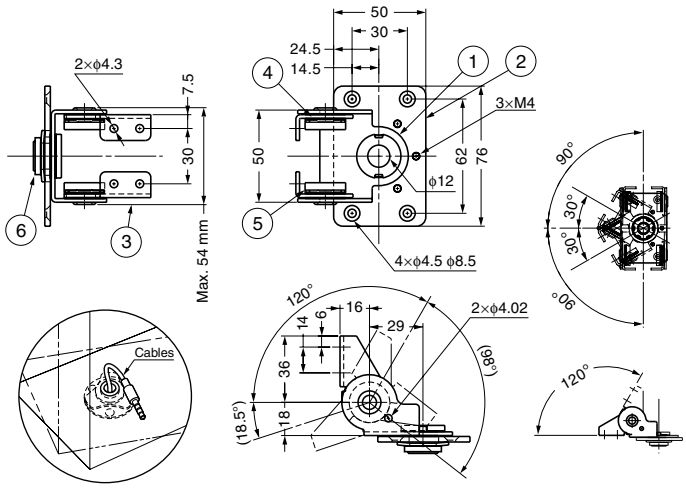

No.	Part Name	Material	Finish
①	Base	Stainless Steel (SUS430)	Mirror
②	Base Plate	Stainless Steel (SUS430)	Mirror
③	Bracket	Stainless Steel (SUS430)	Mirror
④	Plate	Steel	-
⑤	Shaft	Stainless Steel (SUS303)	-
⑥	Washer	Stainless Steel (SUS430)	Mirror

Item Code	Item Name	Torque Moment (Tilting)		Torque Moment (Swiveling)		Weight	Box	Carton
170-012-419	HG-T70S30	7.0±20% N·m	71.4±20% kgf·cm	3.0±20% N·m	30.6±20% kgf·cm	233 g	5 pcs	40 pcs

SWIVEL TORQUE HINGE

STAINLESS 430 STEEL

HG-S

Features

- Rotation angle: 360˚
- Centre hole for easy cable management (except for HG-S-MN).

Video Link

Item Code	Item Name	Hole Diameter	Size	Torque Moment	Load Capacity		Weight	Box	Carton	Page
170-029-726	HG-S7-MN	-	56	0.7$^{\pm20\%}$ N·m (7.1$^{\pm20\%}$ kgf·cm)	-	-	49 g	25 pcs	200 pcs	P.440
170-029-727	HG-S20-MN			2.0$^{\pm20\%}$ N·m (20.4$^{\pm20\%}$ kgf·cm)	-	-	49 g	25 pcs	200 pcs	
170-021-976	HG-S30-12	ϕ12	ϕ54	3.0$^{\pm20\%}$ N·m (30.6$^{\pm20\%}$ kgf·cm)	200 N	20.4 kgf	131 g	10 pcs	100 pcs	
170-021-975	HG-S50-12			5.0$^{\pm20\%}$ N·m (51.0$^{\pm20\%}$ kgf·cm)	200 N	20.4 kgf	131 g	10 pcs	100 pcs	
170-029-728	HG-S30-21	ϕ21.5	ϕ60	3.0$^{\pm20\%}$ N·m (30.6$^{\pm20\%}$ kgf·cm)	200 N	20.4 kgf	173 g	10 pcs	80 pcs	
170-029-729	HG-S50-21			5.0$^{\pm20\%}$ N·m (51.0$^{\pm20\%}$ kgf·cm)	200 N	20.4 kgf	173 g	10 pcs	80 pcs	
*170-023-959	HG-S50-34	ϕ34	ϕ87	5.0$^{\pm20\%}$ N·m (51.0$^{\pm20\%}$ kgf·cm)	400 N	40.8 kgf	274 g	5 pcs	40 pcs	P.441
*170-023-960	HG-S70-34			7.0$^{\pm20\%}$ N·m (71.4$^{\pm20\%}$ kgf·cm)	400 N	40.8 kgf	276 g	5 pcs	40 pcs	
*170-023-961	HG-S70-50	ϕ50	ϕ103	7.0$^{\pm20\%}$ N·m (71.4$^{\pm20\%}$ kgf·cm)	400 N	40.8 kgf	370 g	5 pcs	40 pcs	
*170-023-962	HG-S100-50			10.0$^{\pm20\%}$ N·m (102.0$^{\pm20\%}$ kgf·cm)	400 N	40.8 kgf	370 g	5 pcs	40 pcs	
*170-029-730	HG-S50-75	ϕ75	ϕ128	5.0$^{\pm20\%}$ N·m (51.0$^{\pm20\%}$ kgf·cm)	-	-	576 g	20 pcs	120 pcs	
*170-029-731	HG-S70-75			7.0$^{\pm20\%}$ N·m (71.4$^{\pm20\%}$ kgf·cm)	-	-	576 g	5 pcs	40 pcs	

*Horizontal installation only.

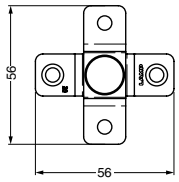

HG-S-MN

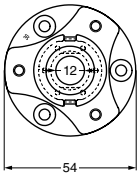

HG-S-12

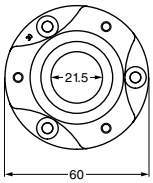

HG-S-21

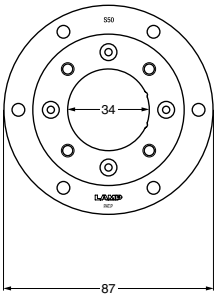

HG-S-34

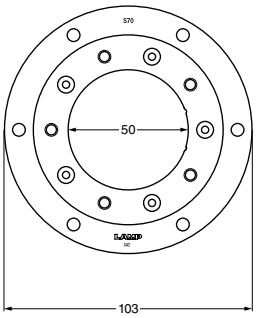

HG-S-50

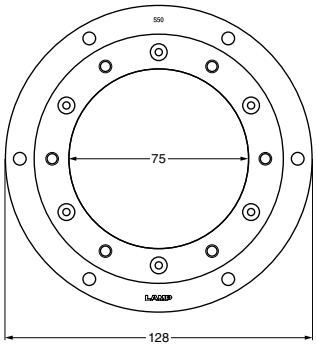

HG-S-75

Application Example

Tablet stand

Wire hole

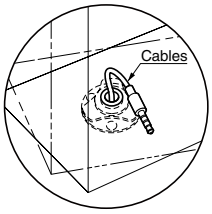

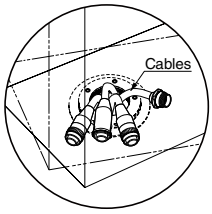

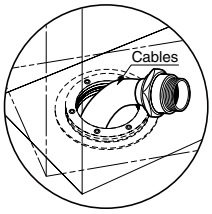

HG-S-MN

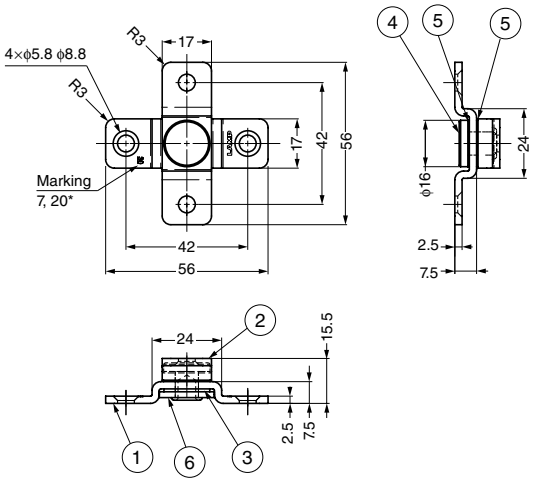

*7 : HG-S7-MN, 20 : HG-S20-MN

Installation

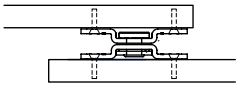

No.	Part Name	Material	Finish
①	Bracket B	Stainless Steel (SUS430)	Mirror
②	Bracket A		
③	F Plate	Bronze	–
④	Shaft	Stainless Steel (SUS303)	
⑤	Spring Washer	Stainless Steel	
⑥	Washer	Stainless Steel (SUS430)	Mirror

Installation

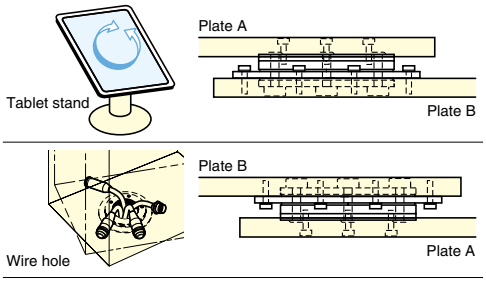

HG-S-12 (Hole Diameter ϕ12)

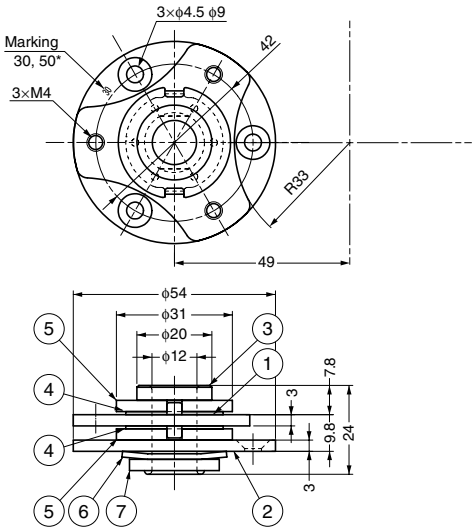

*30 : HG-S30-12, 50 : HGS50-12

Cut Out Dimensions

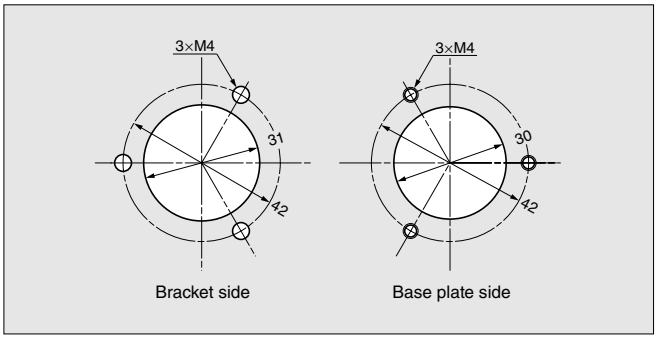

No.	Part Name	Material	Finish
①	Bracket	Stainless Steel (SUS430)	Mirror
②	Base Plate		
③	Sleeve	Stainless Steel (SUS303)	–
④	F Plate	Bronze	
⑤	Washer	Stainless Steel (SUS430)	Mirror
⑥	Spring Washer	Steel	–
⑦	Washer	Stainless Steel (SUS430)	

HG-S-21 (Hole Diameter ϕ21.5)

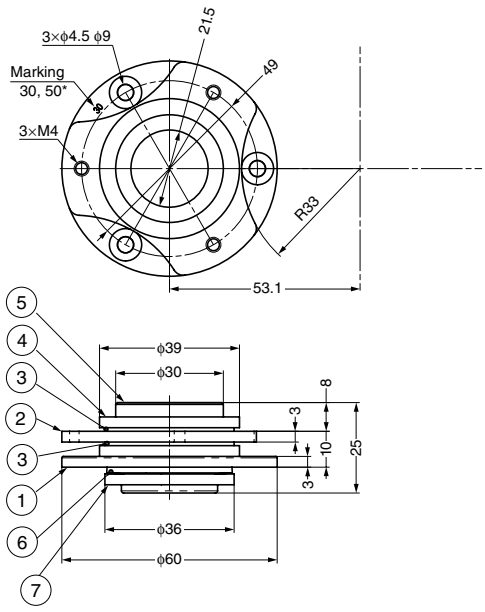

*30 : HG-S30-21, 50 : HG-S50-21

Cut Out Dimensions

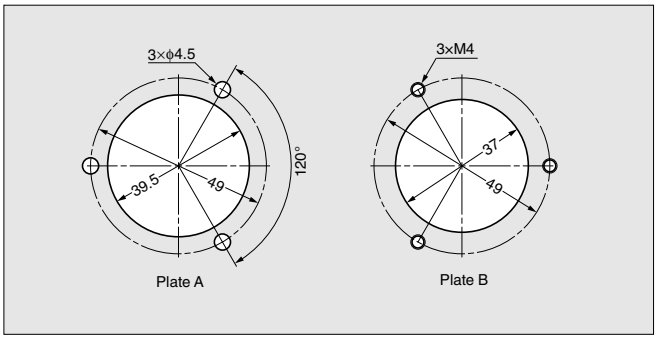

No.	Part Name	Material	Finish
①	Plate B	Stainless Steel (SUS430)	Mirror
②	Plate A		
③	F Plate	Bronze	Polished
④	Washer	Stainless Steel (SUS430)	Mirror
⑤	Sleeve	Stainless Steel (SUS303)	Plain
⑥	Spring Washer	Stainless Steel	–
⑦	Washer	Stainless Steel (SUS430)	

HG-S-34 (Hole Diameter ϕ34)

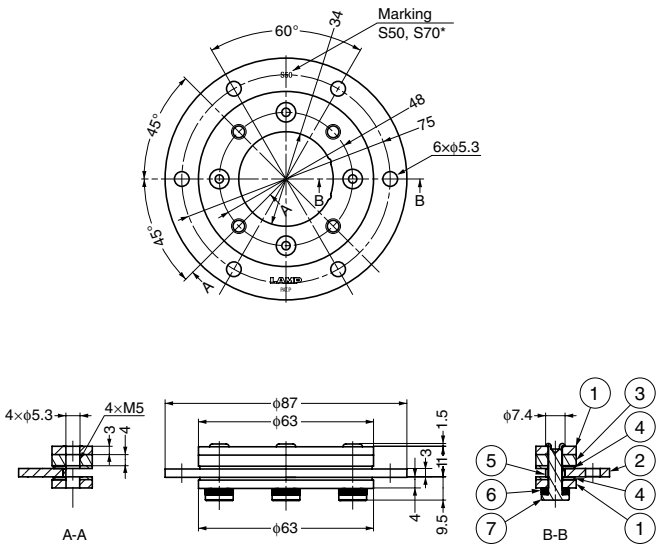

*S50 : HG-S50-34, S70 : HG-S70-34

Cut Out Dimensions

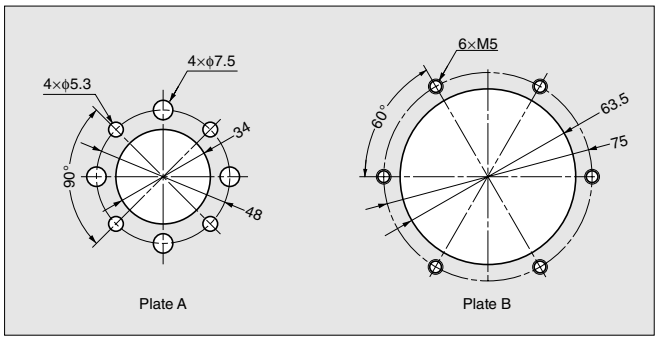

No.	Part Name	Material	Finish
①	Plate A	Stainless Steel (SUS430)	Mirror
②	Plate B		
③	Plate C		
④	F Plate	Bronze	–
⑤	Bush	Polyacetal (POM)	
⑥	Spring Washer	Stainless Steel	
⑦	Shaft	Stainless Steel (SUS303)	

HG-S-50 (Hole Diameter ϕ50)

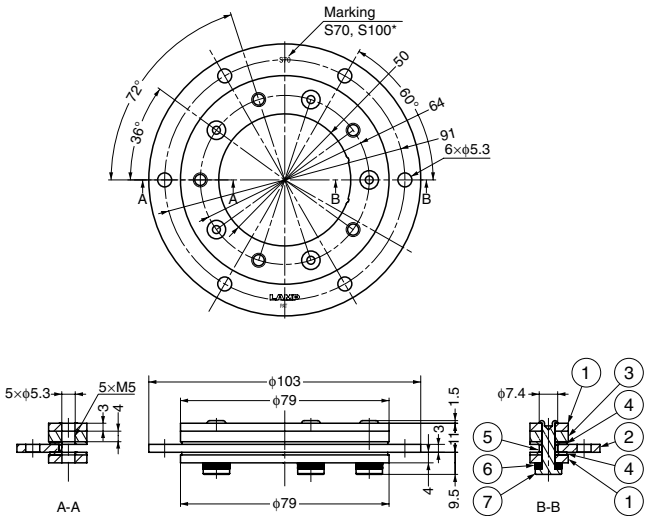

*S70 : HG-S70-50, S100 : HG-S100-50

Cut Out Dimensions

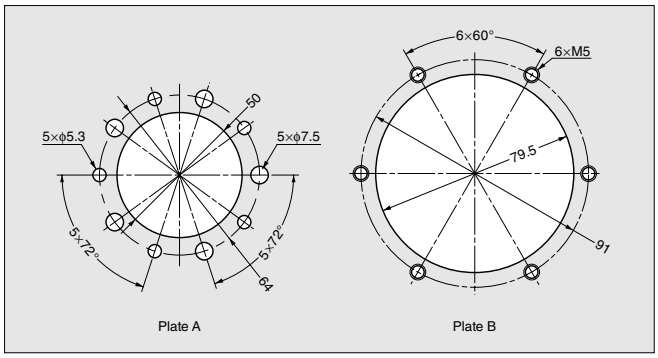

No.	Part Name	Material	Finish
①	Plate A	Stainless Steel (SUS430)	Mirror
②	Plate B		
③	Plate C		
④	F Plate	Bronze	–
⑤	Bush	Polyacetal (POM)	
⑥	Spring Washer	Stainless Steel	
⑦	Shaft	Stainless Steel (SUS303)	

HG-S-75 (Hole Diameter ϕ75)

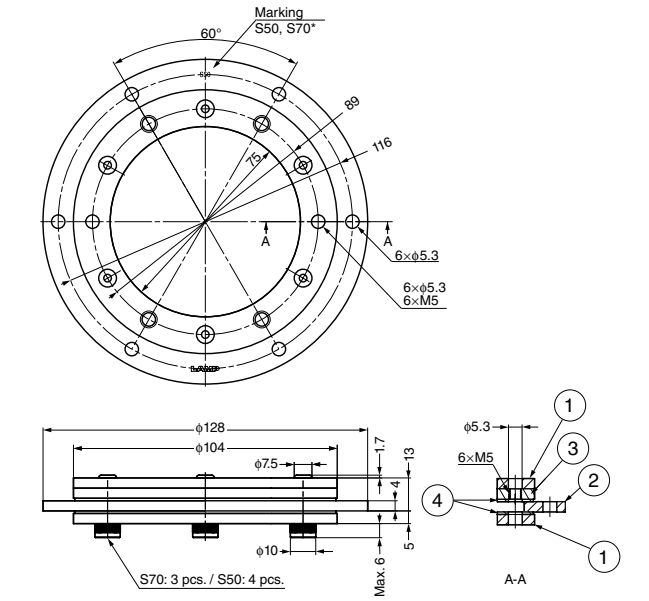

*S50 : HG-S50-75, S70 : HG-S70-75

Cut Out Dimensions

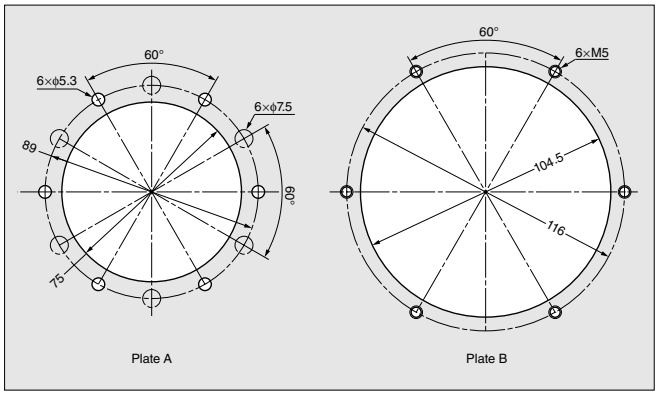

No.	Part Name	Material	Finish
①	Plate A	Stainless Steel (SUS430)	Mirror
②	Plate B		
③	Plate C		
④	F Plate	Bronze	–

DETACHABLE TORQUE HINGE

HG-RNM30

Window Width	Max. 900 mm
Window Height	Max. 450 mm
Window Thickness	28 - 35 mm
Window Weight	Max. 5.5 kg

Features

- Hinge recommended for use on the sides of windows to allow ventilation.
- Free stop: can hold position at any angle.
- Successfully passed 20,000 rotation cycles in a private test.
- Can easily be removed without the need for tools in order to perform maintenance.
- Safety arm can lock hinge shaft in place, preventing unintentional removal.

Parts Included

- Pan head tapping screw 4×20
- Countersunk head tapping screw 4×20

Remarks

Vertical use only.

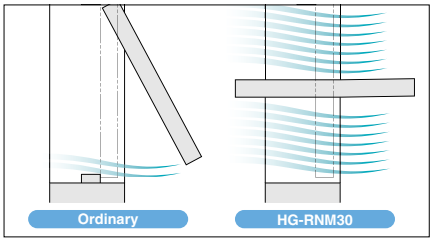

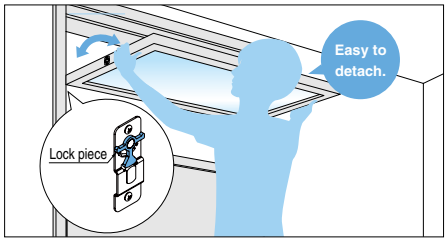

Installation

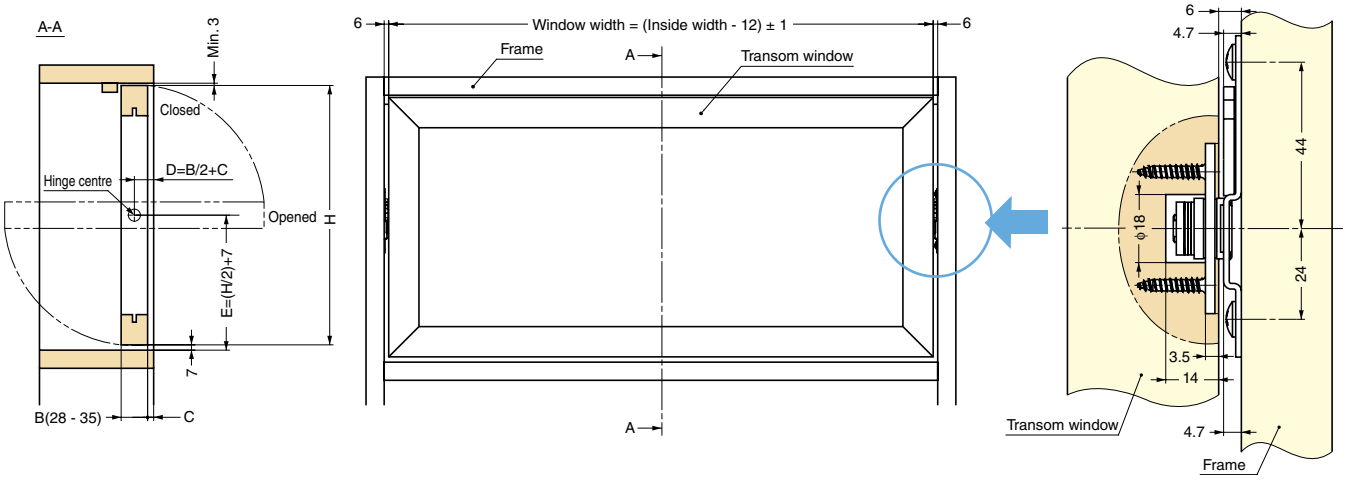

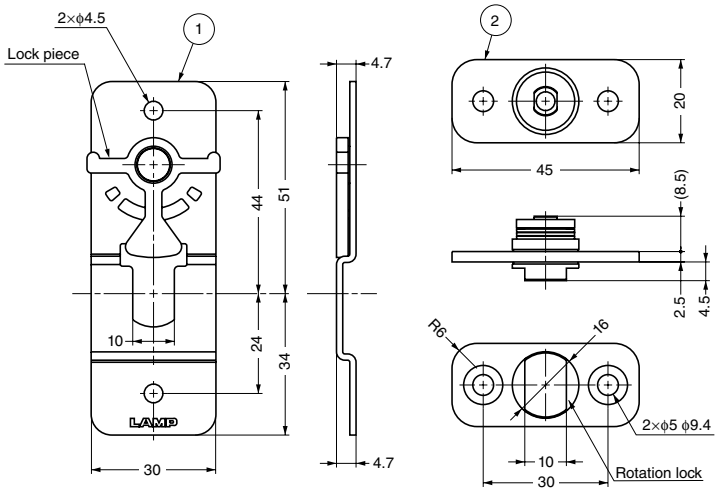

Cut Out Dimensions

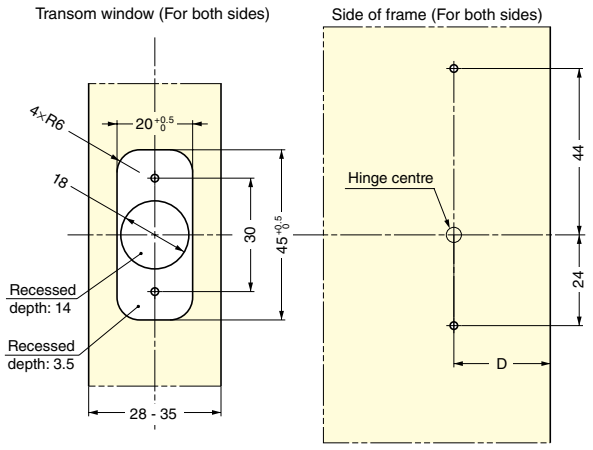

Item Code	Item Name	Torque Moment (Per pair)	Weight	Box	Carton
170-033-319	HG-RNM30-SET	3.0±20% N·m (30.6±20% kgf·cm)	112 g	15 sets	120 sets

No.	Part Name	Material
①	Strike	Stainless Steel, POM
②	Hinge	Stainless Steel

ADJUSTABLE TORQUE HINGE

STAINLESS 430 STEEL

HG-ITJ4080

Features

- Free stop: can hold position at any angle.
- Adjustable torque: from 4 to 8 N·m.
- High torque strength on compact body for effective use of space.
- Minimum torque set at 4 N·m to prevent against accidental falling or slamming of flap.
- Passed 20,000 open/close cycles in a private test.

Remarks

Recommended for use in pairs.

Video Link

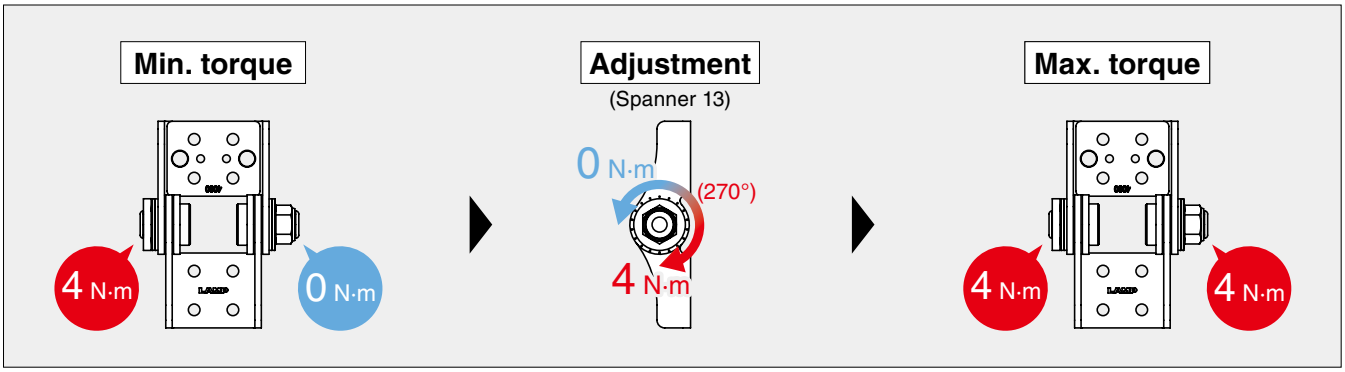

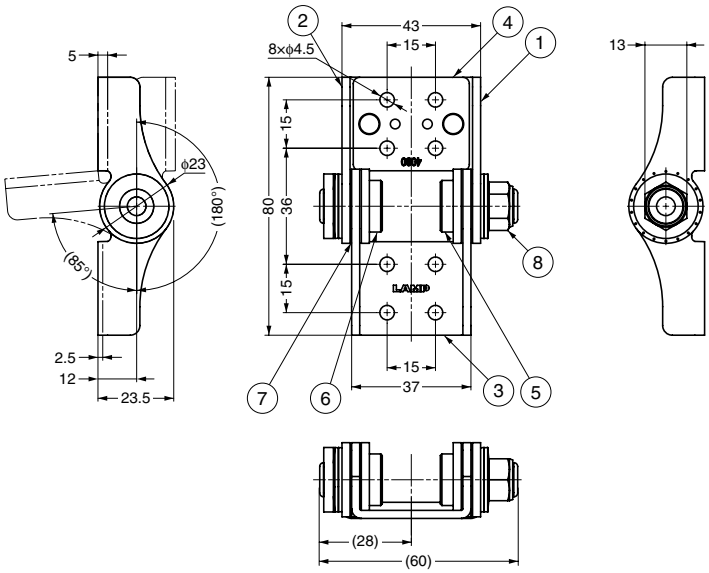

No.	Part Name	Material	Finish
①	Bracket A	Stainless Steel (SUS430)	Mirror
②	Bracket B		
③	Bracket C		
④	Connecting Plate		
⑤	Shaft A	Stainless Steel	–
⑥	Shaft B		
⑦	Washer	Bronze	Polished
⑧	Torque Adjustment Nut M8	Stainless Steel (SUSXM7)	–

Item Code	Item Name	Torque Moment (Per piece)	Weight	Box	Carton
170-029-802	HG-ITJ4080	$4^{\pm 20\%}$ - 8 N·m ($41^{\pm 20\%}$ - 82 kgf·cm)	163 g	10 pcs	80 pcs

ADJUSTABLE ONE WAY TORQUE HINGE HG-TQJ100

Features

- Hinge with torque in only one direction. There is almost no torque in the other direction. This allows for smooth operation.
- Adjustable torque: from 0 to 10 N·m.
- Both opening direction torque type and closing direction torque type available.
- Section to adjust torque is normally covered with a cap for a sleek appearance.

Remarks

- Recommended for use in pairs.
- Use hex key (size 5) for adjustment.
- If the torque resistance decreases, please tighten the torque adjustment nut.

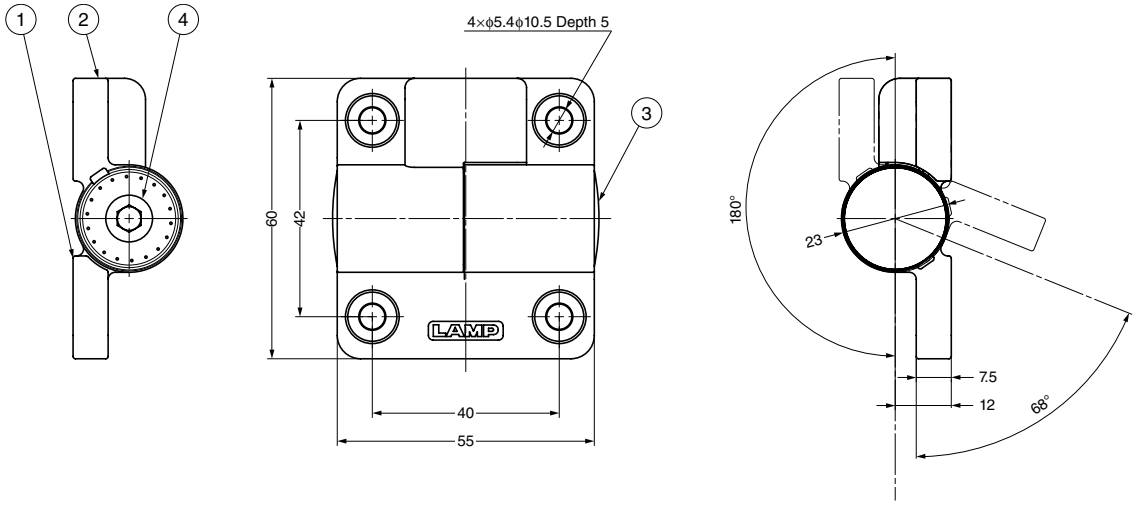

Application Example

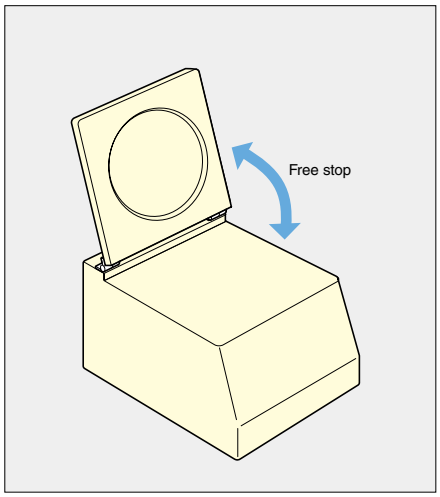

Torque Working Direction

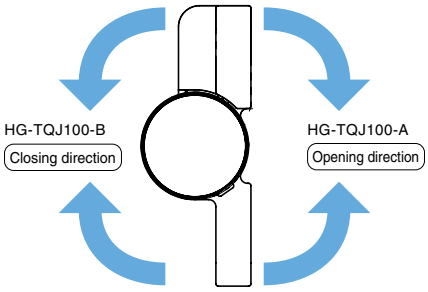

Item Code	Item Name	Torque Working Direction	Torque Moment	Weight	Box	Carton
170-032-969	HG-TQJ100-A	Opening	0 - 10 N·m (0 - 102 kgf·cm)	242 g	12 pcs	96 pcs
170-032-970	HG-TQJ100-B	Closing				

No.	Part Name	Material	Finish/Colour
①	Bracket A	Zinc Alloy	Satin Chrome
②	Bracket B		
③	Cover	Polypropylene (PP)	Dark Grey
④	Torque Adjustment Nut	Stainless Steel	-

ONE WAY TORQUE HINGE

HG-TQA

Features

- Hinge with torque in only one direction. There is almost no torque in the other direction. This allows for smooth operation.
- Free stop within a specific angle range. Consult the charts in the catalogue for specific information about the range.
- Aluminium body.
- Passed 30,000 open/close cycles in a private test.

Remarks

- Operating temperature : 0˚ - 50˚
- Torque will be affected by temperature.
- Not suited to vibration environment.
- Sold in pairs.

Recommended Screw

M5 binding head screw

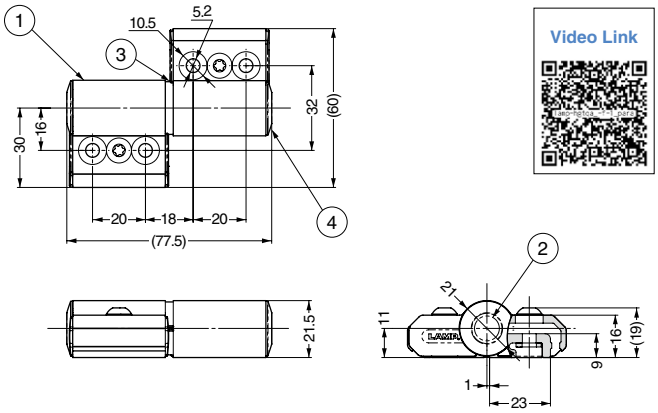

Video Link

Torque and Free Stop Range

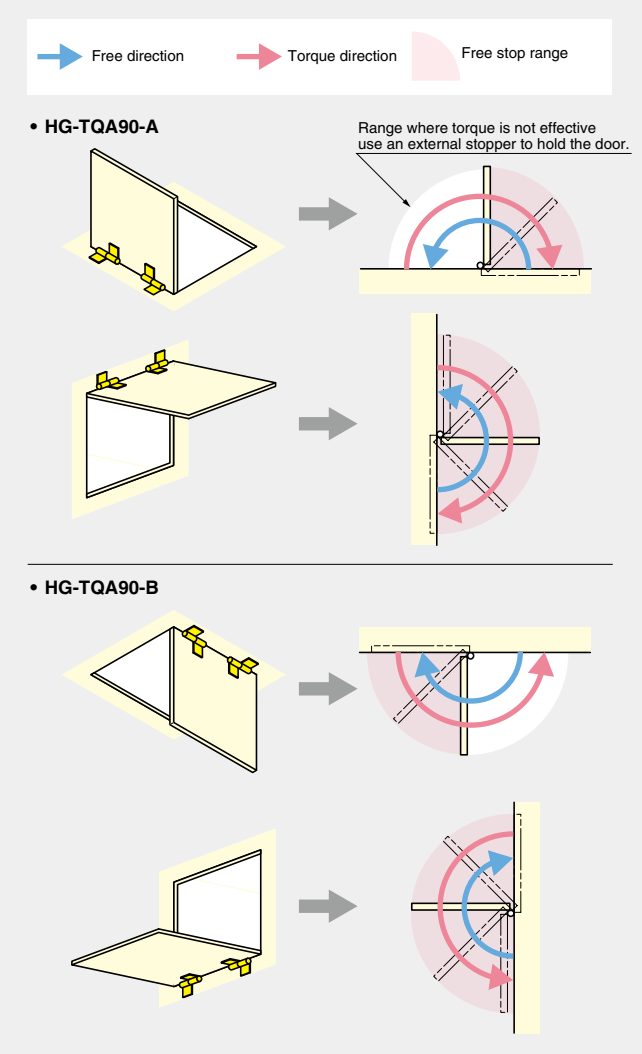

No.	Part Name	Material	Finish/Colour
①	Body	Aluminium Alloy	Anodized Silver
②	Shaft	Stainless Steel	Plain
③	Sleeve	Polyacetal (POM)	Black
④	Cover	Polyacetal (POM)	Black

Application Example

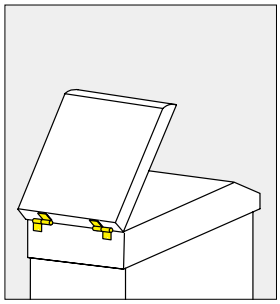

Installation

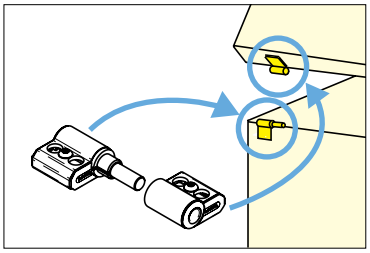

Item Code	Item Name	Torque Moment (Per pair)		Weight	Box
170-021-244	HG-TQA90-A	$9.0^{+40\%}_{-20\%}$ N·m	$91.8^{+40\%}_{-20\%}$ kgf·cm	350 g/set	10 sets
170-021-245	HG-TQA90-B	$9.0^{+40\%}_{-20\%}$ N·m	$91.8^{+40\%}_{-20\%}$ kgf·cm	350 g/set	10 sets

MINI DETENT HINGE

L=R

HG-MPS2

Features

- Plastic hinge holds doors at 3 different positions without secondary support (-10˚, 120˚and 170˚).
- Can be used horizontally or vertically.
- Additional stopper is recommended at 0˚and 170˚.
- Successfully passed for the 40,000 open/close private cycle test.

Recommended Screw

Pan wood screw M4

Video Link

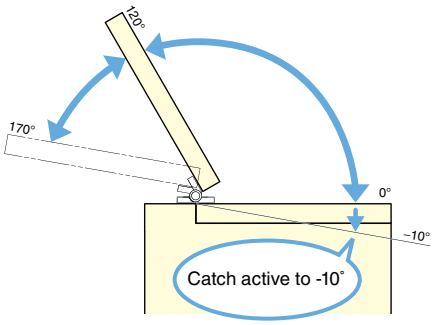

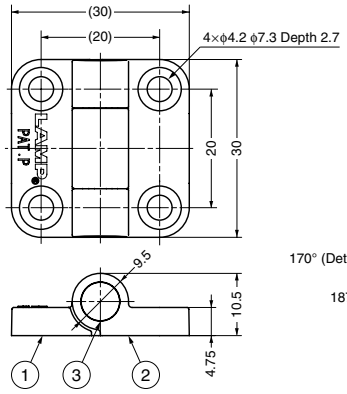

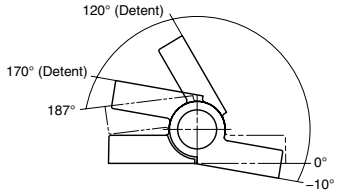

No.	Part Name	Material	Finish/Colour
①	Bracket A	PBT	Black (BL), White (WT)
②	Bracket B	PBT	Black (BL), White (WT)
③	Cap	ABS	Black (BL), White (WT)

Applicable Door Size (per 2 pcs)

Width	Height	Weight
Max. 370	Max. 460	Max. 1.0 kg

Item Code	Item Name	Colour	Catch Release Torque				Weight	Box	Carton
			-10˚, 170˚		120˚				
170-023-908	HG-MPS2-BL	Black	26.0 cN·m	2.65 kgf·cm	14.5 cN·m	1.48 kgf·cm	8 g	50 pcs	500 pcs
170-023-909	HG-MPS2-WT	White	26.0 cN·m	2.65 kgf·cm	14.5 cN·m	1.48 kgf·cm	8 g	50 pcs	500 pcs

DETENT HINGE

L=R

HG-YJ50

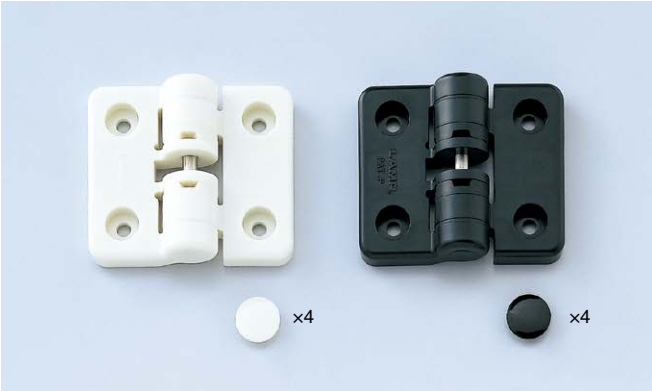

Features

- Plastic hinge holds doors at 4 different positions (90˚ increment) without secondary support.
- Caps for the screw holes are included.

Parts Included

Caps (Ivory : KD-772-3I, Black : KD-772-3B)

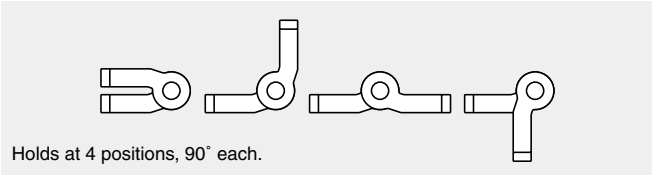

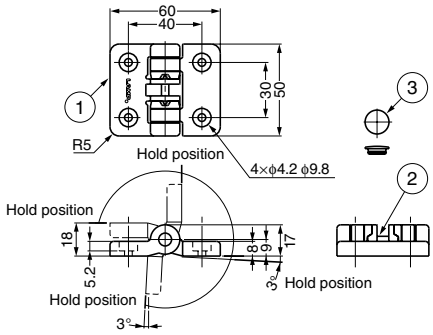

No.	Part Name	Material	Finish/Colour
①	Body	Polyacetal (POM)	Ivory (IV), Black (BL)
②	Shaft	Stainless Steel (SUS303)	–
③	Cover	Polypropylene (PP)	Ivory (IV), Black (BL)

Item Code	Item Name	Colour	Door Width	Door Height	Door Weight	Torque Moment (Per piece)		Weight	Box	Carton
170-090-000	HG-YJ50IV	Ivory	Max. 400	Max. 500	Max. 1.2 kg	Approx. 49 cN·m	Approx. 5 kgf·cm	35 g	20 pcs	200 pcs
170-090-002	HG-YJ50BL	Black	Max. 400	Max. 500	Max. 1.2 kg	Approx. 49 cN·m	Approx. 5 kgf·cm	35 g	20 pcs	200 pcs

DETENT HINGE (WITH/WITHOUT DAMPER)

Lapcon

HG-CSH63

No.	Part Name	Material	Finish
①	Body	Aluminium Alloy	Silver
②	Shaft·Spring	Stainless Steel (SUS304)	–

Features

- Detent hinge with built-in damper as an option.
- Detent will hold lid in open/closed position without secondary support, and optional damper will provide soft-closing.
- Operating angle: 100˚.
  (Detent at both 0˚ and 100˚)

Remarks

Recommended for use in pairs.

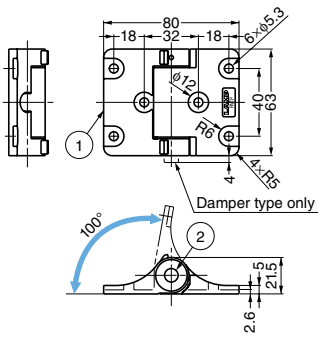

Application Example

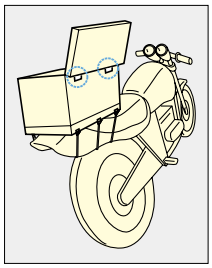

Installation

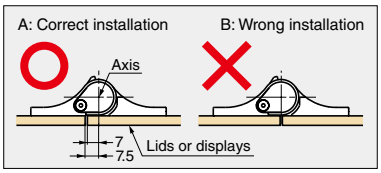

Types

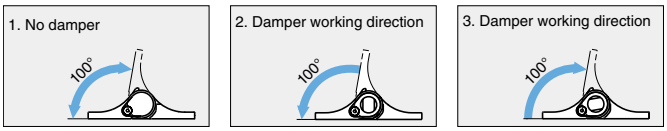

Item Code	Item Name	Type	Damping Direction	Torque Moment (Per piece)		Retaining Force Torque Moment		Opening Angle	Weight	Box	Carton
170-090-044	HG-CSH63	1	With Detent Only	With Detent Only	With Detent Only	0.98 N·m	10 kgf·cm	100˚	115 g	10 pcs	120 pcs
170-090-109	HG-CSH63AM	2	Counter Clockwise	1 - 1.7 N·m	10.2 - 17.3 kgf·cm	0.98 N·m	10 kgf·cm	100˚	104 g	10 pcs	120 pcs
170-090-108	HG-CSH63AH	2	Counter Clockwise	1.7 - 2.5 N·m	17.3 - 25.5 kgf·cm	0.98 N·m	10 kgf·cm	100˚	104 g	10 pcs	120 pcs
170-090-111	HG-CSH63BM	3	Clockwise	1 - 1.7 N·m	10.2 - 17.3 kgf·cm	0.98 N·m	10 kgf·cm	100˚	117 g	10 pcs	120 pcs
170-090-110	HG-CSH63BH	3	Clockwise	1.7 - 2.5 N·m	17.3 - 25.5 kgf·cm	0.98 N·m	10 kgf·cm	100˚	117 g	10 pcs	120 pcs

DETENT HINGE

L=R STAINLESS 304 STEEL

HG-YC105

Features

- Snaps in at 115˚ open position.
- Holds door open without secondary support.

Application Example

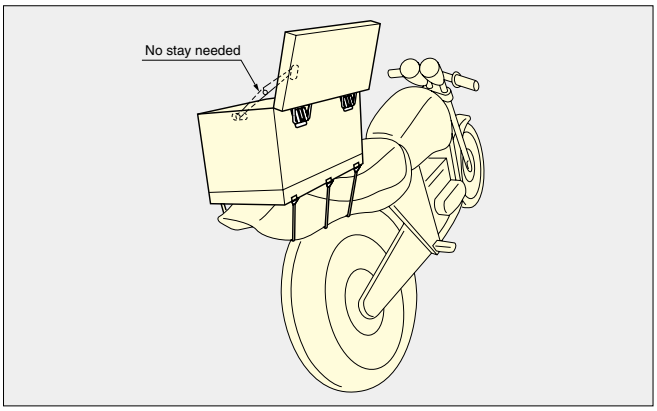

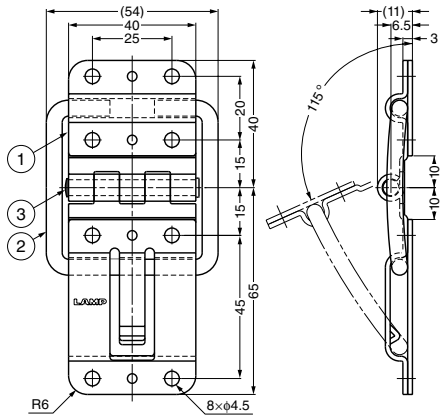

No.	Part Name	Material	Finish
①	Body	Stainless Steel (SUS304)	Mirror
②	Stopper	Stainless Steel (SUS304)	–
③	Shaft	Stainless Steel (SUS304)	–

Item Code	Item Name	Retaining Force (Per piece)		Weight	Box	Carton
170-099-093	HG-YC105	Approx. 1.18 N·m	Approx. 12 kgf·cm	122 g	10 pcs	100 pcs

GLASS SHOWCASE HARDWARE SERIES DIGEST XL-GC

Features

- Hinges, Locks and Sliding door hardware with integrated design.
- Swing and Sliding Doors can be operated with a single key.
- Key hole is located on the side for clean appearance.
- Insert key to unlock.
- Locks when key is pulled out.

Video Link

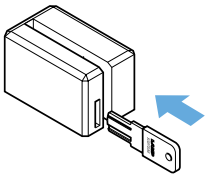

Double Door

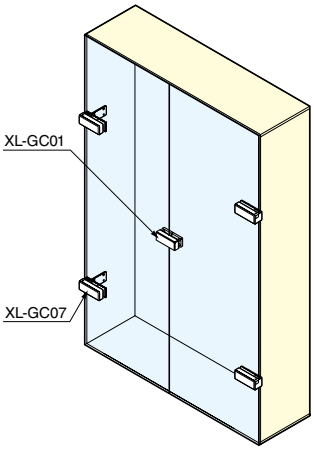

Swing Door

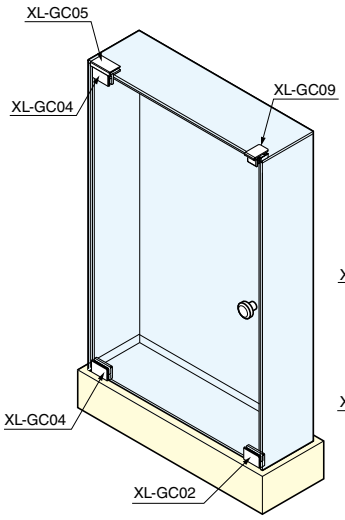

Can be installed on wooden cabinet.

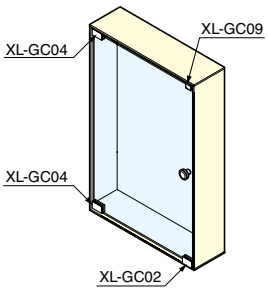

Sliding Door

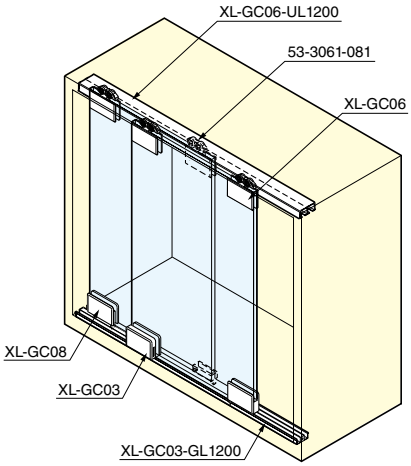

Locks

Part Name	Item Name		Page
For Double Doors	XL-GC01-CR		P.337
For Swing Doors	XL-GC02-CR		
For Sliding Doors	XL-GC03-CR		

Hinges

Part Name	Item Name		Page
Inset Type	XL-GC04-CR		P.449
Overlay Type	XL-GC07-CR		
Glass Bracket	XL-GC05-CR		

Sliding Door Hardware

Part Name	Item Name		Page
Upper Bracket	XL-GC06-CR		P.642
Bottom Guide Bracket	XL-GC08-CR		

Catch

Part Name	Item Name		Page
Magnetic Catch	XL-GC09-CR		P.274

GLASS PIVOT HINGE (INSET) XL-GC04-CR

Features

- Inset-type hinge for glass cabinet.
- 1 pair (top / bottom) per set.

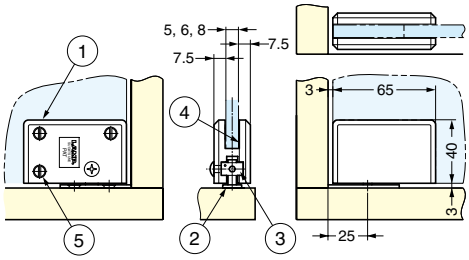

Cut Out Dimensions

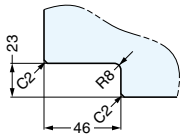

No.	Part Name	Material	Finish/Colour
①	Body	Zinc Alloy (ZDC)	Chrome
②	Bottom Plate	Steel	Chrome
③	Plate	Stainless Steel (SUS304)	Plain
④	Spacer	Polyvinyl Chloride Resin (PVC)	Clear
⑤	Screw	Stainless Steel (SUS304)	Plain

Item Code	Item Name	Door Width	Door Height	Glass Thickness	Door Weight	Weight	Carton
170-080-009	XL-GC04-CR	Max. 500	Max. 1200	5, 6, 8	Max. 12 kg/set	580 g	24 pcs

GLASS HINGE (OVERLAY, W/ CATCH) L=R XL-GC07-CR

Features

- Hinge with catch for overlay door of glass cabinet.
- Can be used with XL-GC01-CR (P.337).

Remarks

Can not be used with XL-GC02 because the lock is only for inset doors.

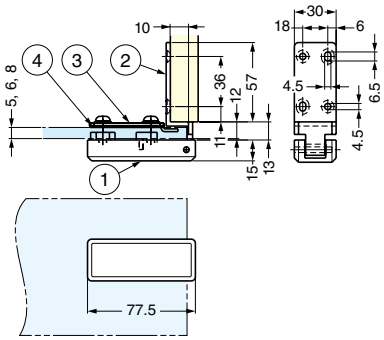

Cut Out Dimensions

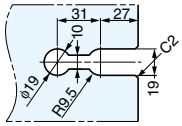

No.	Part Name	Material	Finish/Colour
①	Body	Zinc Alloy (ZDC)	Chrome
②	Hinge Plate	Zinc Alloy (ZDC)	Chrome
③	Back Plate	Steel	Chrome
④	Spacer	Rubber	Black

Item Code	Item Name	Door Width	Door Height	Glass Thickness	Door Weight	Weight	Carton
170-080-008	XL-GC07-CR	Max. 500	Max. 1200	5, 6, 8	Max. 12 kg/2 pcs	303 g	24 pcs

GLASS BRACKET XL-GC05-CR

Features

- Top board hinge bracket for glass cabinet.
- To be used with XL-GC04-CR (above).

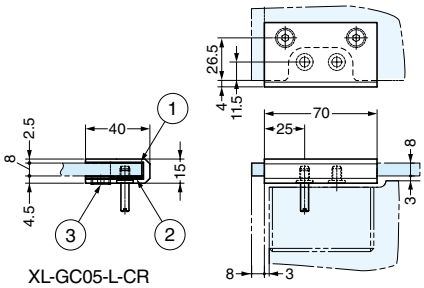

XL-GC05-L-CR

Cut Out Dimensions (Top Board)

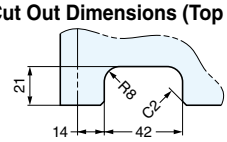

Cut Out Dimensions (Glass Door)

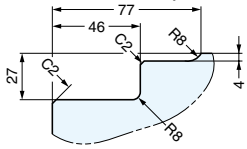

No.	Part Name	Material	Finish/Colour
①	Body	Zinc Alloy (ZDC)	Chrome
②	Spacer	Polyvinyl Chloride Resin (PVC)	Clear
③	Screw	Stainless Steel (SUS304)	Plain

Item Code	Item Name	Type	Material	Finish	Glass Thickness	Weight	Carton
170-080-011	XL-GC05-R-CR	Right	Zinc Alloy (ZDC)	Chrome	8	180 g	24 pcs
170-080-010	XL-GC05-L-CR	Left	Zinc Alloy (ZDC)	Chrome	8	180 g	24 pcs

INSET GLASS DOOR HINGE

L=R

GH-450

Features

- Suitable for showcases.
- Mounting position adjustable: Vertically -2 mm
  Horizontally -2.5 mm
- Spacer included to accommodate different glass thickness.

Cut Out Dimensions

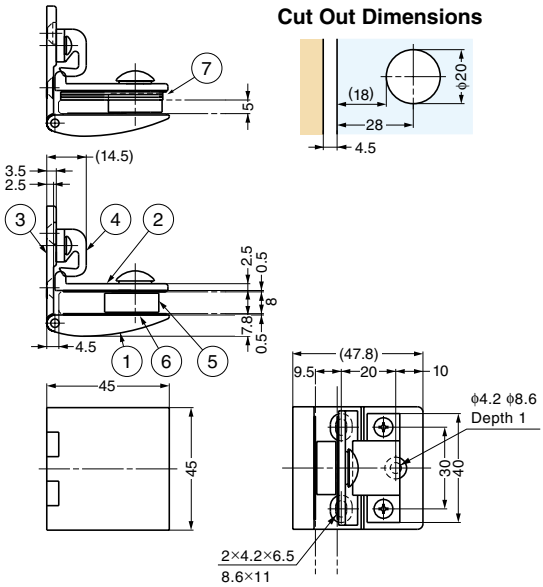

Recommended Screws

Size 4 countersunk head screw

No.	Part Name	Material	Finish/Colour		
			SN	CR	GC
①	Front Plate	Brass	Satin Nickel	Chrome	Gold
②	Fixing Plate	Brass	Satin Nickel	Chrome	Gold
③	Hinge Plate	Brass	Satin Nickel	Chrome	Gold
④	Catch	Polyamide (PA)	Black	Black	Black
⑤	Glass Adjustment Block	Polyamide (PA)	Black	Black	Black
⑥	Pad	Chloroprene Rubber (CR)	Black	Black	Black
⑦	Spacer	Polypropylene (PP)	Black	Black	Black

Item Code	Item Name	Finish	Door Width	Door Height	Glass Thickness	Door Weight	Weight	Box	Carton
170-090-699	GH-450-SN	Satin Nickel	Max. 600	Max. 1200	5, 6, 8	Max. 15 kg/2 pcs	207 g	10 pcs	40 pcs
170-090-700	GH-450-CR	Chrome	Max. 600	Max. 1200	5, 6, 8	Max. 15 kg/2 pcs	207 g	10 pcs	40 pcs
170-090-701	GH-450-GC	Gold	Max. 600	Max. 1200	5, 6, 8	Max. 15 kg/2 pcs	207 g	10 pcs	40 pcs

Qty of Spacers

Door Thickness (mm)	5	6	8
Qty of Spacers	3	2	No Spacer

INSET GLASS DOOR HINGE (GLASS FRAME TYPE)

L=R

GH-450G

Features

- Suitable for showcases.
- Mounting position adjustable: Horizontally -2.5 mm
- Spacer included to accommodate different glass thickness.

Cut Out Dimensions (Glass Door)

Cut Out Dimensions (Side Panel)

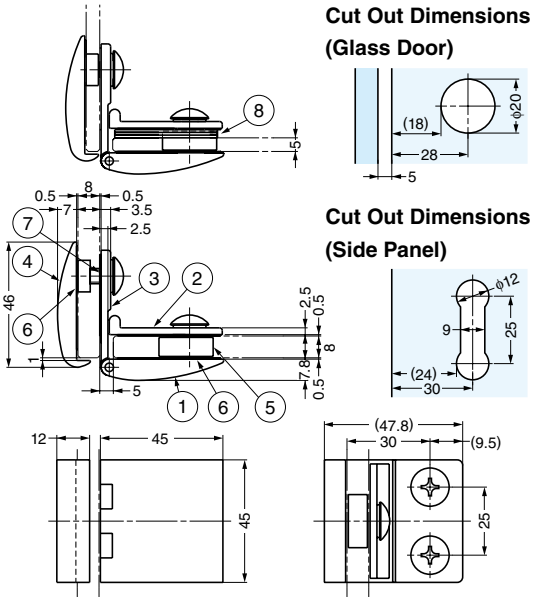

No.	Part Name	Material	Finish/Colour		
			SN	CR	GC
①	Front Plate	Brass	Satin Nickel	Chrome	Gold
②	Fixing Plate	Brass	Satin Nickel	Chrome	Gold
③	Hinge Plate	Brass	Satin Nickel	Chrome	Gold
④	Side Plate	Brass	Satin Nickel	Chrome	Gold
⑤	Glass Adjustment Block	Polyamide (PA)	Black	Black	Black
⑥	Pad A	Chloroprene Rubber (CR)	Black	Black	Black
⑦	Pad B	Chloroprene Rubber (CR)	Black	Black	Black
⑧	Spacer	Polypropylene (PP)	Black	Black	Black

Item Code	Item Name	Finish	Door Width	Door Height	Glass Thickness	Door Weight	Weight	Box	Carton
170-090-705	GH-450G-SN	Satin Nickel	Max. 600	Max. 1200	5, 6, 8	Max. 15 kg/2 pcs	314 g	10 pcs	80 pcs
170-090-706	GH-450G-CR	Chrome	Max. 600	Max. 1200	5, 6, 8	Max. 15 kg/2 pcs	314 g	10 pcs	80 pcs
170-090-707	GH-450G-GC	Gold	Max. 600	Max. 1200	5, 6, 8	Max. 15 kg/2 pcs	314 g	10 pcs	80 pcs

Qty of Spacers

Door Thickness (mm)	5	6	8
Qty of Spacers	3	2	No Spacer

HALF OVERLAY GLASS DOOR HINGE (W/ CATCH) L=R GH-456C

Features

- Suitable for showcases.
- Mounting position adjustable: Vertically ±1 mm
  Horizontally ±1.2 mm
- Spacer included to accommodate different glass thickness.

Cut Out Dimensions

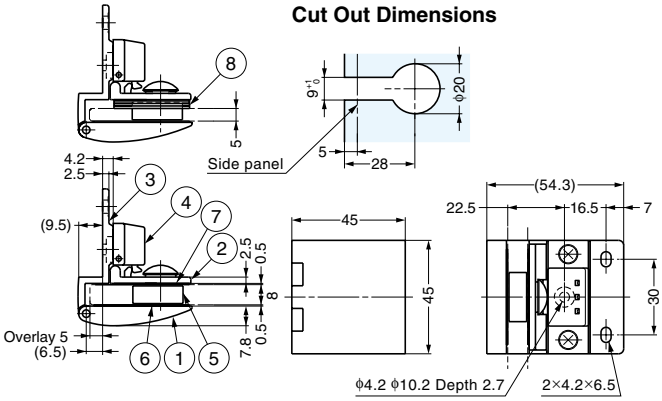

Recommended Screws

Size 4 countersunk head screw

No.	Part Name	Material	Finish/Colour		
			SN	CR	GC
①	Front Plate	Brass	Satin Nickel	Chrome	Gold
②	Fixing Plate	Brass	Satin Nickel	Chrome	Gold
③	Hinge Plate	Brass	Satin Nickel	Chrome	Gold
④	Catch	PBT, Polyacetal (POM)	Black	Black	Black
⑤	Glass Adjustment Block	Polyamide (PA)	Black	Black	Black
⑥	Pad A	Polyvinyl Chloride Resin (PVC)	Black	Black	Black
⑦	Pad B	Polyvinyl Chloride Resin (PVC)	Black	Black	Black
⑧	Spacer	Polypropylene (PP)	Black	Black	Black

Qty of Spacers

Door Thickness (mm)	5	6	8
Qty of Spacers	3	2	No Spacer

Item Code	Item Name	Finish	Door Width	Door Height	Glass Thickness	Door Weight	Weight	Box	Carton
170-020-968	GH-456C-SN	Satin Nickel	Max. 600	Max. 1200	5, 6, 8	Max. 6 kg/2 pcs	216 g	10 pcs	80 pcs
170-020-969	GH-456C-CR	Chrome	Max. 600	Max. 1200	5, 6, 8	Max. 6 kg/2 pcs	216 g	10 pcs	80 pcs
170-020-970	GH-456C-GC	Gold	Max. 600	Max. 1200	5, 6, 8	Max. 6 kg/2 pcs	216 g	10 pcs	80 pcs

HALF OVERLAY GLASS DOOR HINGE (W/O CATCH) L=R GH-456N

Features

- Suitable for showcases.
- Mounting position adjustable: Vertically ±1 mm
  Horizontally ±1.2 mm
- Spacer included to accommodate different glass thickness.

Cut Out Dimensions

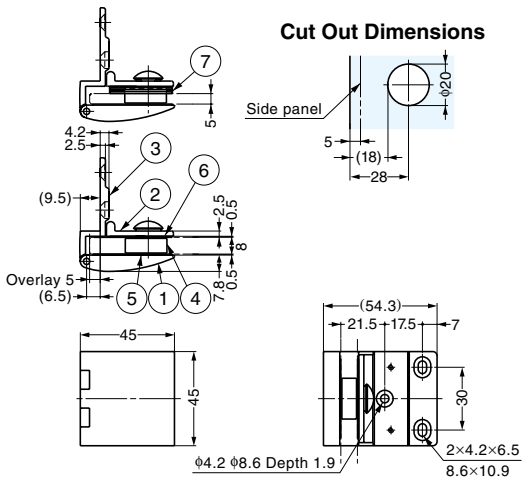

Recommended Screws

Size 4 truss head screw

No.	Part Name	Material	Finish/Colour		
			SN	CR	GC
①	Front Plate	Brass	Satin Nickel	Chrome	Gold
②	Fixing Plate	Brass	Satin Nickel	Chrome	Gold
③	Hinge Plate	Brass	Satin Nickel	Chrome	Gold
④	Glass Adjustment Block	Polyamide (PA)	Black	Black	Black
⑤	Pad A	Chloroprene Rubber (CR)	Black	Black	Black
⑥	Pad B	Chloroprene Rubber (CR)	Black	Black	Black
⑦	Spacer	Polypropylene (PP)	Black	Black	Black

Qty of Spacers

Door Thickness (mm)	5	6	8
Qty of Spacers	3	2	No Spacer

Item Code	Item Name	Finish	Door Width	Door Height	Glass Thickness	Door Weight	Weight	Box	Carton
170-090-702	GH-456N-SN	Satin Nickel	Max. 600	Max. 1200	5, 6, 8	Max. 6 kg/2 pcs	206 g	10 pcs	80 pcs
170-090-703	GH-456N-CR	Chrome	Max. 600	Max. 1200	5, 6, 8	Max. 6 kg/2 pcs	206 g	10 pcs	80 pcs
170-090-704	GH-456N-GC	Gold	Max. 600	Max. 1200	5, 6, 8	Max. 6 kg/2 pcs	206 g	10 pcs	80 pcs

INSET GLASS DOOR HINGE

L=R STAINLESS 304 STEEL

XL-GH03-48-0

Features

Hinge for medium size glass/acrylic doors.

Remarks

Recommended for use in pairs.

Parts Included

- Washer (2 pcs.)
- Truss head screw M4×12 (2 pcs.)

Cut Out Dimensions

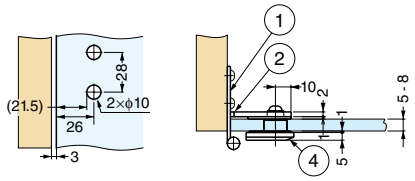

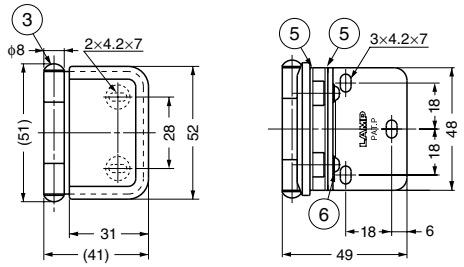

No.	Part Name	Material	Finish/Colour	
			CR	GC
①	Hinge Plate	Stainless Steel (SUS304)	Mirror	Gold, Clear
②	Arm	Stainless Steel (SUS304)	Mirror	Gold, Clear
③	Shaft	Stainless Steel (SUS304)	Mirror	Plain, Gold, Clear
④	Plate	Zinc Alloy (ZDC)	Chrome	Gold, Clear
⑤	Spacer	Polyethylene	Natural	Natural
⑥	Screw	Stainless Steel (SUS304)	Plain	Plain, Gold, Clear

Item Code	Item Name	Door Width	Door Height	Glass Thickness	Door Weight	Weight	Box	Carton
170-098-651	XL-GH03-48-0CR	Max. 650	Max. 900	5, 6, 8	Max. 12 kg/2 pcs	132 g	10 pcs	100 pcs
170-098-652	XL-GH03-48-0GC	Max. 650	Max. 900	5, 6, 8	Max. 12 kg/2 pcs	144 g	10 pcs	100 pcs

HALF OVERLAY GLASS DOOR HINGE

L=R STAINLESS 304 STEEL

XL-GH03-48-8

Features

Hinge for medium size glass/acrylic doors.

Remarks

Recommended for use in pairs.

Parts Included

- Washer (2 pcs.)
- Truss head screw M4×12 (2 pcs.)

Cut Out Dimensions

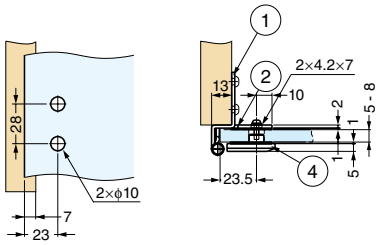

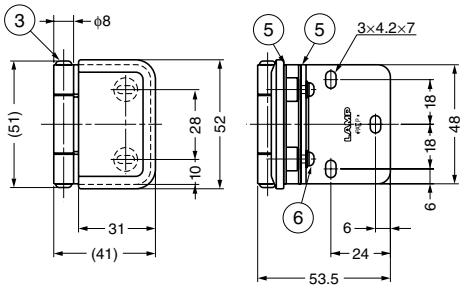

No.	Part Name	Material	Finish/Colour	
			CR	GC
①	Hinge Plate	Stainless Steel (SUS304)	Mirror	Gold, Clear
②	Arm	Stainless Steel (SUS304)	Mirror	Gold, Clear
③	Shaft	Stainless Steel (SUS304)	Mirror	Plain, Gold, Clear
④	Plate	Zinc Alloy (ZDC)	Chrome	Gold, Clear
⑤	Spacer	Polyethylene	Natural	Natural
⑥	Screw	Stainless Steel (SUS304)	Plain	Plain, Gold, Clear

Item Code	Item Name	Door Width	Door Height	Glass Thickness	Door Weight	Weight	Box	Carton
170-098-649	XL-GH03-48-8CR	Max. 650	Max. 900	5, 6, 8	Max. 12 kg/2 pcs	141 g	10 pcs	100 pcs
170-098-650	XL-GH03-48-8GC	Max. 650	Max. 900	5, 6, 8	Max. 12 kg/2 pcs	148 g	10 pcs	100 pcs

INSET GLASS DOOR LIFT-OFF HINGE GH36-NCR

Features

Hinge for glass/acrylic doors.

Remarks

Recommended for use in pairs.

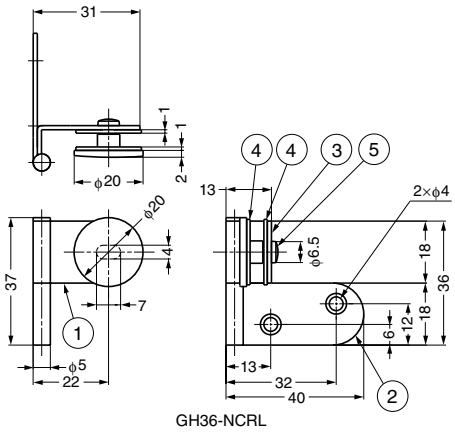

Installation Example

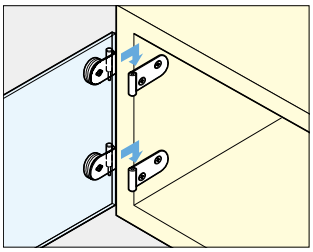

Cut Out Dimensions

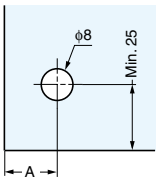

Glass Thickness	A
4	19
5	18
6	17

No.	Part Name	Material	Finish/Colour
①	Body (Male)	Steel	Chrome
②	Body (Female)	Steel	Chrome
③	Plate	Brass	Chrome
④	Washer	Polyvinyl Chloride Resin (PVC)	Clear
⑤	Screw	Steel	Nickel

Item Code	Item Name	Type	Door Width	Door Height	Glass Thickness	Door Weight	Weight	Box	Carton
170-097-958	GH36-NCRR	Right	Max. 450	Max. 700	4, 5, 6	Max. 4 kg/2 pcs	26 g	100 pcs	400 pcs
170-097-957	GH36-NCRL	Left	Max. 450	Max. 700	4, 5, 6	Max. 4 kg/2 pcs	26 g	100 pcs	400 pcs

HALF OVERLAY GLASS DOOR HINGE (W/ CATCH) L=R GHC34-8

Features

- Hinge for glass/acrylic doors.
- Holds door in closed position without secondary support.

Remarks

Recommended for use in pairs.

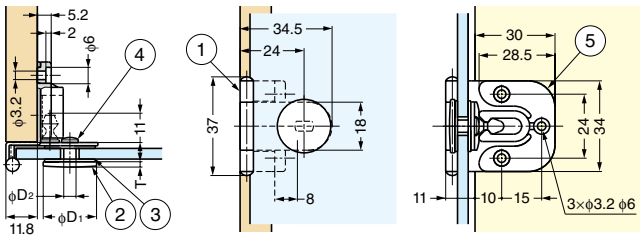

Cut Out Dimensions

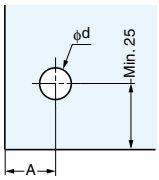

Glass Thickness	A	Overlay
4	19	7
5	18	6
6	17	5

No.	Part Name	Material		Finish/Colour
①	Body	GHC34-8G	Steel	Gold, Clear
①	Body	GHC34-8B	Stainless Steel (SUS304)	Black
①	Body	GHC34-8CR	Steel	Chrome
②	Plate	GHC34-8G	Brass	Polished, Clear
②	Plate	GHC34-8B	Aluminium Alloy	Black Anodized
②	Plate	GHC34-8CR	Brass	Chrome
③	Washer	Polyvinyl Chloride Resin (PVC)		Clear
④	Screw	GHC34-8CR, GHC34-8B/Steel		Nickel
④	Screw	GHC34-G/Brass		Plain
⑤	Catch	Polyacetal (POM)		Black
⑤	Catch	Polyacetal (POM)		White (GHC34-8CR-W)

Item Code	Item Name	D_1	D_2	d	T	Door Width	Door Height	Glass Thickness	Door Weight	Weight	Box	Carton
170-083-524	GHC34-8G	20	6.5	8	2	Max. 450	Max. 700	4, 5, 6	Max. 4 kg/2 pcs	36 g	40 pcs	600 pcs
170-083-508	GHC34-8B	21	8	10	3	Max. 450	Max. 700	4, 5, 6	Max. 4 kg/2 pcs	32 g	40 pcs	600 pcs
170-083-523	GHC34-8CR	20	6.5	8	2	Max. 450	Max. 700	4, 5, 6	Max. 4 kg/2 pcs	36 g	40 pcs	600 pcs
170-083-516	GHC34-8CR-W	20	6.5	8	2	Max. 450	Max. 700	4, 5, 6	Max. 4 kg/2 pcs	36 g	40 pcs	600 pcs

INSET GLASS DOOR HINGE

L=R STAINLESS 304 STEEL

GH34-0SS

Features

Hinge for glass/acrylic doors.

Remarks

Recommended for use in pairs.

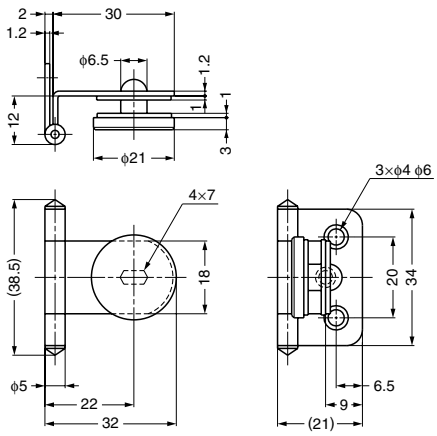

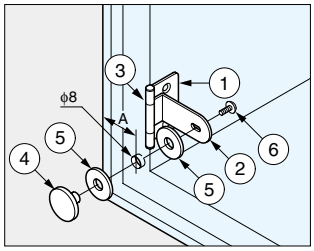

Cut Out Dimensions

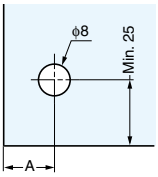

Glass Thickness	A
4	19
5	18
6	17

No.	Part Name	Material	Finish/Colour
①	Body	Stainless Steel (SUS304)	Plain
②	Arm	Stainless Steel (SUS304)	Plain
③	Shaft	Stainless Steel	Plain
④	Plate	Aluminium Alloy	Anodized
⑤	Washer	Polyvinyl Chloride Resin (PVC)	Clear
⑥	Screw	Stainless Steel	Plain

Item Code	Item Name	Door Width	Door Height	Glass Thickness	Door Weight	Weight	Box	Carton
170-083-529	GH34-0SS	Max. 450	Max. 700	4, 5, 6	Max. 4 kg/2 pcs	20 g	150 pcs	900 pcs

HALF OVERLAY GLASS DOOR HINGE

L=R STAINLESS 304 STEEL

GH34-8SS

Features

Hinge for glass/acrylic doors.

Remarks

Recommended for use in pairs.

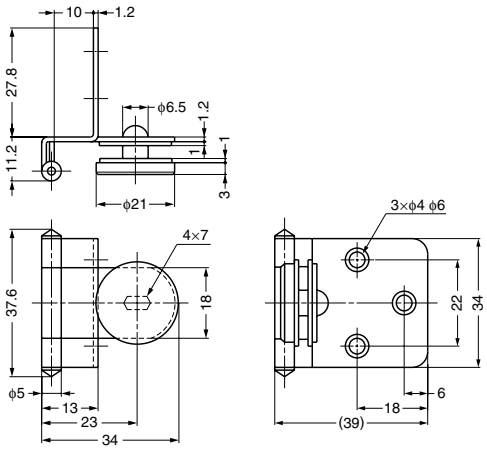

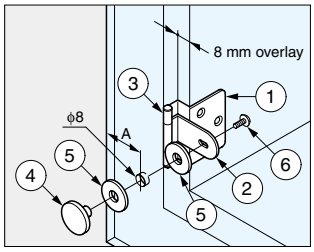

Cut Out Dimensions

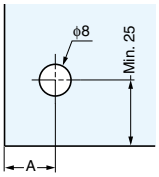

Glass Thickness	A	Overlay
4	19	8
5	18	7
6	17	6

No.	Part Name	Material	Finish/Colour
①	Body	Stainless Steel (SUS304)	Plain
②	Arm	Stainless Steel (SUS304)	Plain
③	Shaft	Stainless Steel	Plain
④	Plate	Aluminium Alloy	Anodized
⑤	Washer	Polyvinyl Chloride Resin (PVC)	Clear
⑥	Screw	Stainless Steel	Plain

Item Code	Item Name	Door Width	Door Height	Glass Thickness	Door Weight	Weight	Box	Carton
170-083-530	GH34-8SS	Max. 450	Max. 700	4, 5, 6	Max. 4 kg/2 pcs	26 g	100 pcs	600 pcs

INSET GLASS DOOR HINGE

L=R **GH34-0**

Features

Hinge for glass/acrylic doors.

Remarks

Recommended for use in pairs.

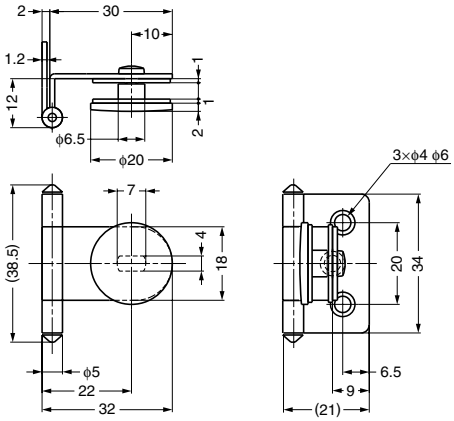

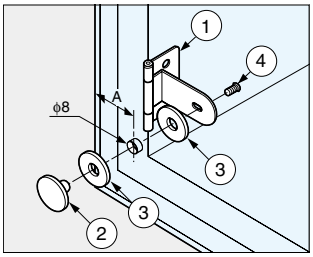

Cut Out Dimensions

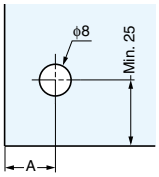

Glass Thickness	A
4	19
5	18
6	17

No.	Part Name	Material	Finish/Colour
①	Body	Steel	Chrome, Paint/Black
②	Plate	Brass	Chrome, Paint/Black
③	Washer	Polyvinyl Chloride Resin (PVC)	Clear
④	Screw	Steel	Nickel, Paint/Black

Item Code	Item Name	Finish	Door Width	Door Height	Glass Thickness	Door Weight	Weight	Box	Carton
170-083-513	GH34-0CR	Chrome	Max. 450	Max. 700	4, 5, 6	Max. 4 kg/2 pcs	25 g	150 pcs	900 pcs
170-025-831	GH34-0BL	Paint/Black	Max. 450	Max. 700	4, 5, 6	Max. 4 kg/2 pcs	25 g	150 pcs	900 pcs

HALF OVERLAY GLASS DOOR HINGE

L=R **GH34-8**

Features

Hinge for glass/acrylic doors.

Remarks

Recommended for use in pairs.

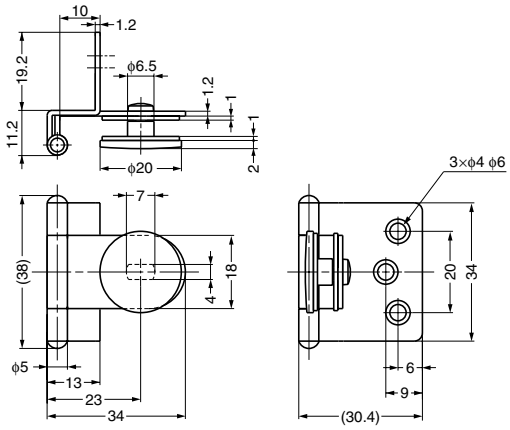

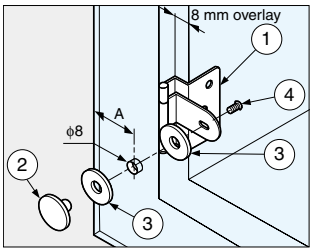

Cut Out Dimensions

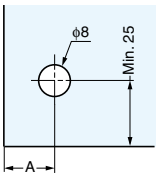

Glass Thickness	A	Overlay
4	19	8
5	18	7
6	17	6

No.	Part Name	Material	Finish/Colour
①	Body	Steel	Chrome, Paint/Black
②	Plate	Brass	Chrome, Paint/Black
③	Washer	Polyvinyl Chloride Resin (PVC)	Clear
④	Screw	Steel	Nickel, Paint/Black

Item Code	Item Name	Finish	Door Width	Door Height	Glass Thickness	Door Weight	Weight	Box	Carton
170-083-528	GH34-8CR	Chrome	Max. 450	Max. 700	4, 5, 6	Max. 4 kg/2 pcs	30 g	50 pcs	500 pcs
170-025-832	GH34-8BL	Paint/Black	Max. 450	Max. 700	4, 5, 6	Max. 4 kg/2 pcs	30 g	50 pcs	500 pcs

INSET GLASS DOOR HINGE

L=R

GH34-0CR-K

Features

Hinge for glass/acrylic doors.

Remarks

Recommended for use in pairs.

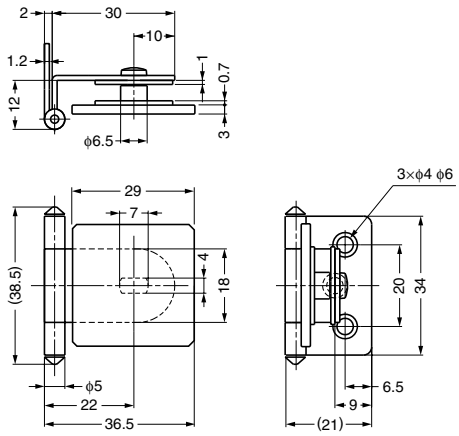

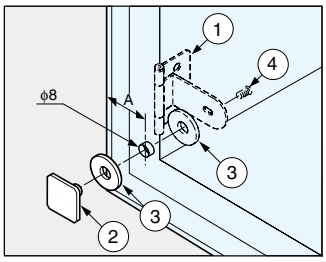

Cut Out Dimensions

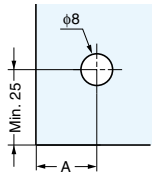

Glass Thickness	A
4	19
5	18
6	17

No.	Part Name	Material	Finish/Colour
①	Body	Steel	Chrome
②	Plate	Zinc Alloy (ZDC)	Chrome
③	Washer	Polyvinyl Chloride Resin (PVC)	Clear
④	Screw	Steel	Nickel

Item Code	Item Name	Door Width	Door Height	Glass Thickness	Door Weight	Weight	Box	Carton
170-019-481	GH34-0CR-K	Max. 450	Max. 700	4, 5, 6	Max. 4 kg/2 pcs	34 g	150 pcs	900 pcs

HALF OVERLAY GLASS DOOR HINGE

L=R

GH34-8CR-K

Features

Hinge for glass/acrylic doors.

Remarks

Recommended for use in pairs.

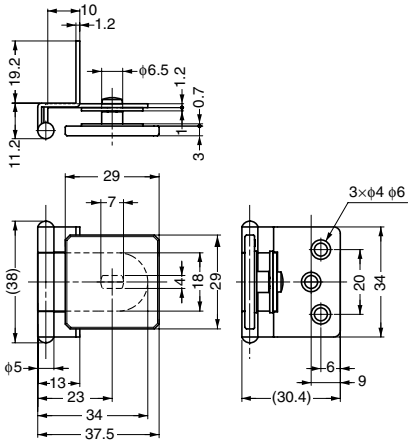

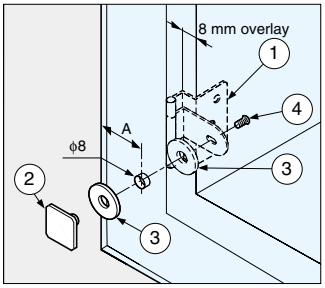

Cut Out Dimensions

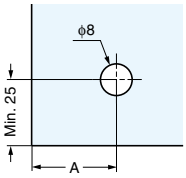

Glass Thickness	A	Overlay
4	19	8
5	18	7
6	17	6

No.	Part Name	Material	Finish/Colour
①	Body	Steel	Chrome
②	Plate	Zinc Alloy (ZDC)	Chrome
③	Washer	Polyvinyl Chloride Resin (PVC)	Clear
④	Screw	Steel	Nickel

Item Code	Item Name	Door Width	Door Height	Glass Thickness	Door Weight	Weight	Box	Carton
170-019-482	GH34-8CR-K	Max. 450	Max. 700	4, 5, 6	Max. 4 kg/2 pcs	37 g	50 pcs	500 pcs

HALF OVERLAY GLASS DOOR HINGE (W/ CATCH) L=R GHC34-8CR-K

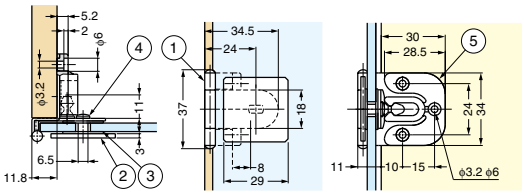

Cut Out Dimensions

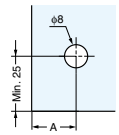

Features

Hinge for glass/acrylic doors.

Remarks

Recommended for use in pairs.

No.	Part Name	Material	Finish/ Colour
①	Body	Steel	Chrome
②	Plate	Zinc Alloy (ZDC)	Chrome
③	Washer	Polyvinyl Chloride Resin (PVC)	Clear
④	Screw	Steel	Nickel
⑤	Catch	Polyacetal (POM)	Black

Glass Thickness	A	Overlay
4	19	7
5	18	6
6	17	5

Item Code	Item Name	Door Width	Door Height	Glass Thickness	Door Weight	Weight	Box	Carton
170-019-480	GHC34-8CR-K	Max. 450	Max. 700	4, 5, 6	Max. 4 kg/2 pcs	50 g	40 pcs	600 pcs

DAMPER CATCH L=R STEEL DC

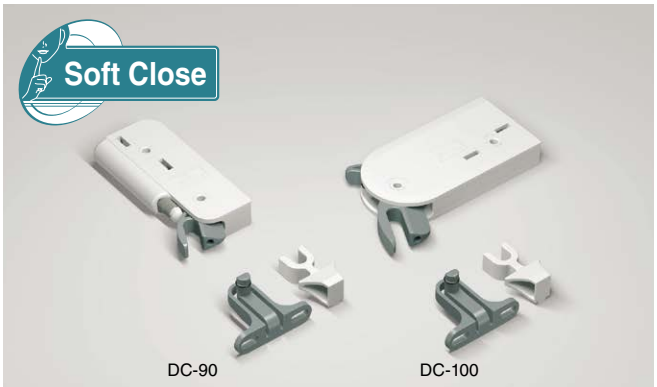

Features

- Damper and catch combination for sideways opening doors.
- Prevents doors from slamming.
- Holds doors in closed position.
- Separate models for wood and glass doors.
- Non-handed.
- 2013 winner of Good Design Award.

Video Link

Parts included

- Truss head tapping screw 4×30
- Truss head tapping screw 4×16
- Truss countersunk head screw 4×12
- Trigger Jig
- Face plate (Only included in DC-90G, DC-100G)

Face plate for glass door

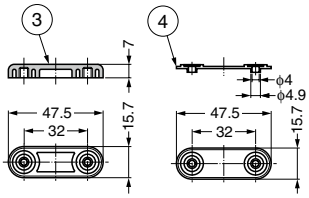

Installation

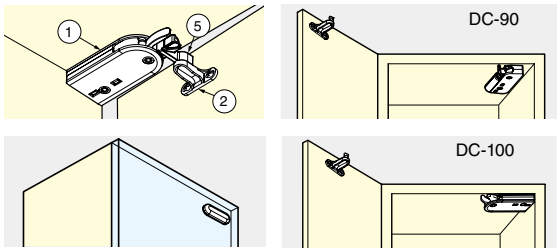

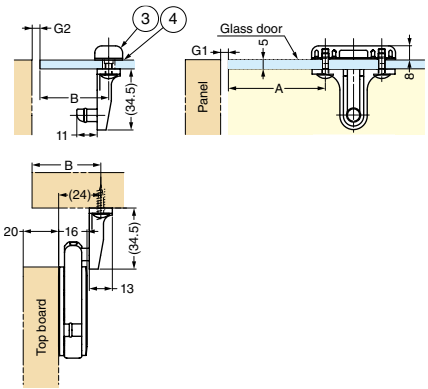

DC-90

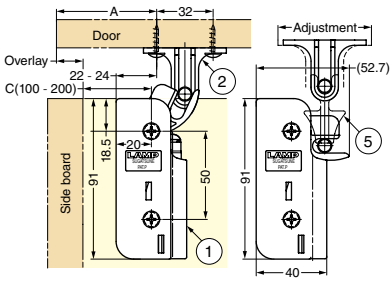

Installation Position	A	B
Inset Door	C-G1+3	24-G2
Overlay Door	C+Overlay+3	Overlay+24

DC-100

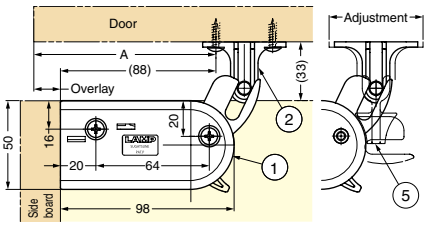

Installation Position	A	B
Inset Door	88-G1	24-G2
Overlay Door	Overlay+88	Overlay+24

G1 is the gap between the door edge and the side board. G2 is the gap between the edge of the door and the top board.

Cut Out Dimensions for Glass Door

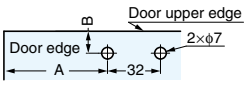

No.	Parts Name	Material	Finish/Colour
①	Body	Polyacetal (POM) /PBT	Dark Grey/Light Grey
②	Counter Plate	Polyacetal (POM)	Dark Grey
③	Face Plate	Zinc Alloy (ZDC)	Chrome
④	Spacer	ABS	Black
⑤	Jig	PBT	Light Grey

Item Code	Item Name	Type	Door Width	Door Height	Glass Thickness	Door Weight	Weight	Box	Carton
140-021-698	DC-90G	Glass Door	450	600	5	4 kg	91 g	25 pcs	200 pcs
140-021-700	DC-100G	Glass Door	600	800	5	7 kg	116 g	25 pcs	200 pcs
140-021-697	DC-90	Wood Door	450	600	–	4 kg	69 g	25 pcs	200 pcs
140-021-699	DC-100	Wood Door	600	800	–	7 kg	92 g	25 pcs	200 pcs

GLASS DOOR HINGE

L=R STAINLESS 304 STEEL STEEL

XL-GH01-600

Features

Pre-drilling on glass/acrylic not required.

Remarks

Use 2 washers for 4 mm door thickness.

Parts Included

Countersunk head wood screw 3.5×20

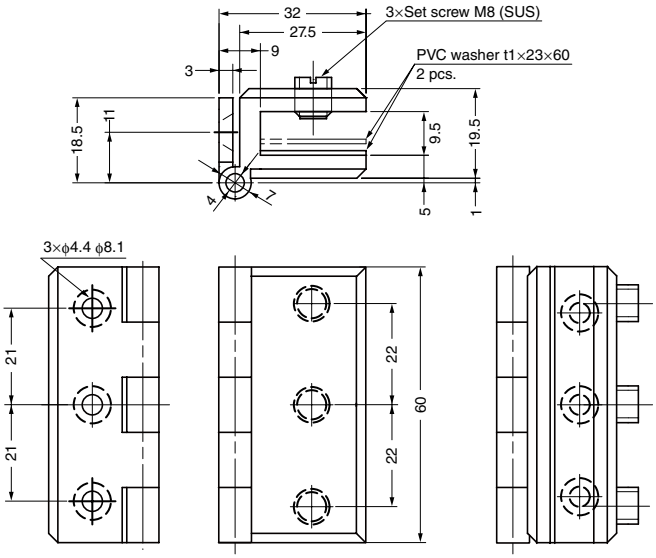

Item Code	Item Name	Material	Finish	Door Width	Door Height	Glass Thickness	Door Weight	Weight	Box	Carton
170-080-501	XL-GH01-600	Stainless Steel (SCS13)	Mirror	Max. 450	Max. 1300	4, 5, 6, 8	Max. 11 kg/2 pcs	188 g	10 pcs	50 pcs

*SCS13 is equivalent of SUS304.

GLASS DOOR HINGE

L=R STAINLESS 304 STEEL STEEL

XL-GH01-250

Features

Pre-drilling on glass/acrylic not required.

Remarks

Use 2 washers for 4 mm door thickness.

Parts Included

Countersunk head wood screw 3.5×20

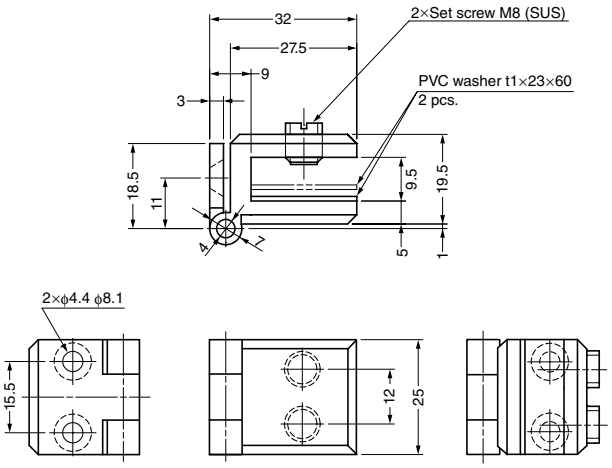

Item Code	Item Name	Material	Finish	Door Width	Door Height	Glass Thickness	Door Weight	Weight	Box	Carton
170-080-500	XL-GH01-250	Stainless Steel (SCS13)	Mirror	Max. 400	Max. 600	4, 5, 6, 8	Max. 4.8 kg/2 pcs	60 g	10 pcs	100 pcs

*SCS13 is equivalent of SUS304.

INSET GLASS DOOR PIVOT HINGE

L=R

GP-40

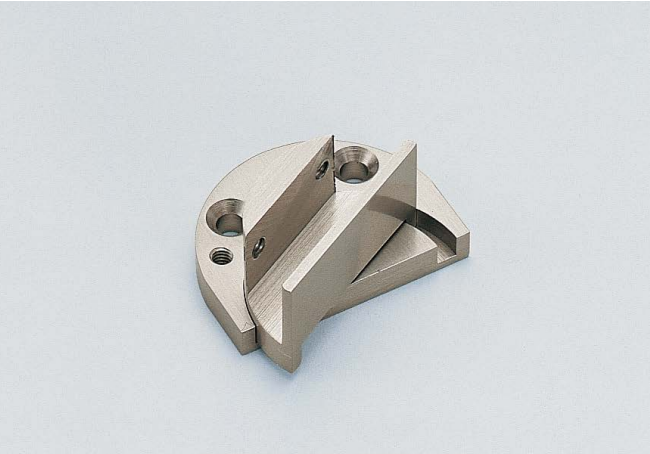

Features

Pre-drilling on glass/acrylic not required.

Remarks

Recommended for use in pairs.

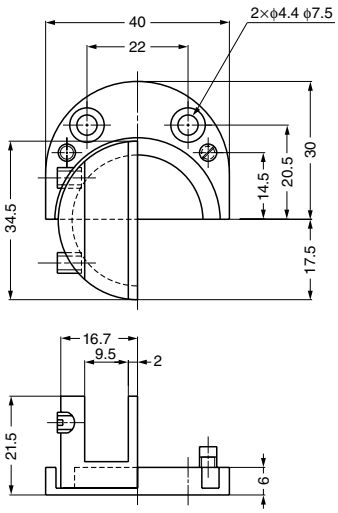

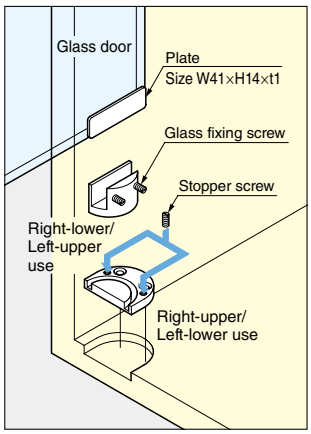

Item Code	Item Name	Material	Finish	Door Width	Door Height	Glass Thickness	Door Weight	Weight	Box	Carton
170-083-506	GP-40	Brass	Satin Nickel	Max. 450	Max. 700	3, 4, 5, 6, 8	Max. 4 kg/2 pcs	76 g	35 pcs	350 pcs

INSET GLASS DOOR PIVOT HINGE

L=R

GH-PSL40

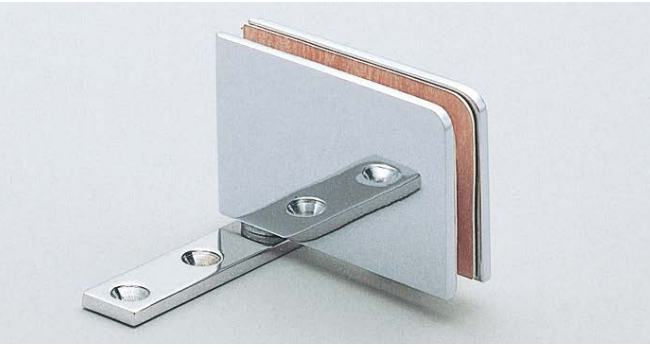

Features

Rotates 360˚.

Remarks

Sold in pairs.

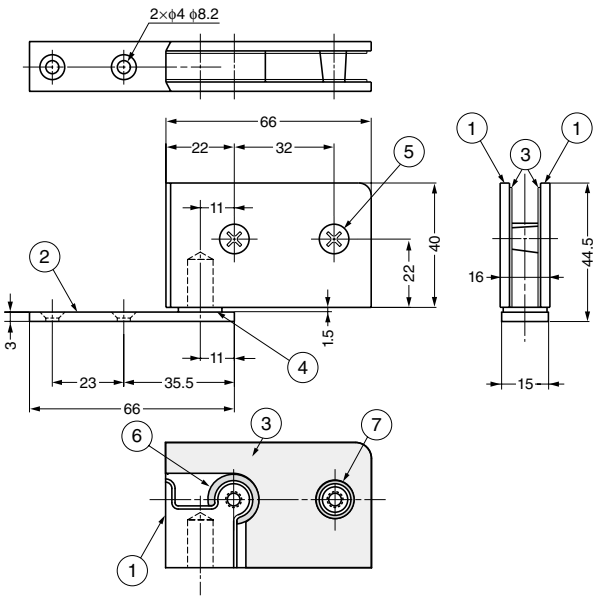

Cut Out Dimensions

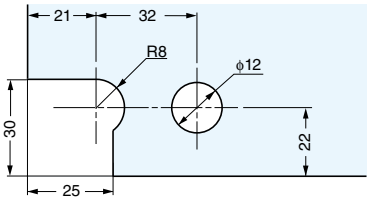

No.	Part Name	Material	Finish/Colour
①	Body	Brass	Chrome
②	Plate	Brass	Chrome
③	Spacer	Polyvinyl Chloride Resin (PVC)	Clear
④	Washer	Polyamide (PA)	White
⑤	Screw	Brass	Chrome
⑥	Gasket	Polyvinyl Chloride Resin (PVC)	Clear
⑦	Gasket	Polyvinyl Chloride Resin (PVC)	Clear

Item Code	Item Name	Door Width	Door Height	Glass Thickness	Door Weight	Weight	Box	Carton
170-080-038	GH-PSL40	Max. 650	Max. 2000	8	Max. 20 kg/set	400 g	5 sets	40 set

INSET DOOR PIVOT HINGE

L=R **PV-30**

Features

Easy installation for lower pivot spring pin.

Remarks

Sold in pairs.

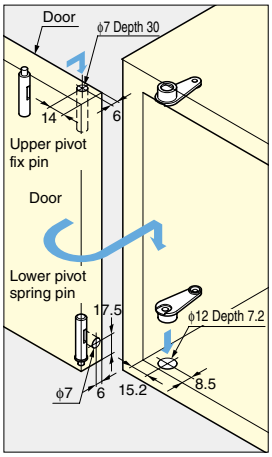

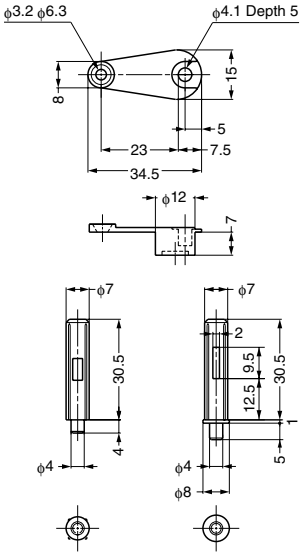

Upper pivot (Fix pin) Lower pivot (Spring pin)

Item Code	Item Name	Material	Finish/Colour	Door Width	Door Height	Door Thickness	Door Weight	Weight	Box	Carton
170-090-060	PV-30	Polyamide (PA), Steel (Pin)	White/Nickel	Max. 450	Max. 700	Max. 21	Max. 2.6 kg/set	9 g	100 sets	1000 sets

INSET DOOR PIVOT HINGE (ADJUSTABLE)

L=R **PH084N**

Features

Function to adjust horizontally and vertically.

Remarks

2 pcs required for 1 door.

Adjustment Range

Depth : 2 mm / Horizontal : 2 mm

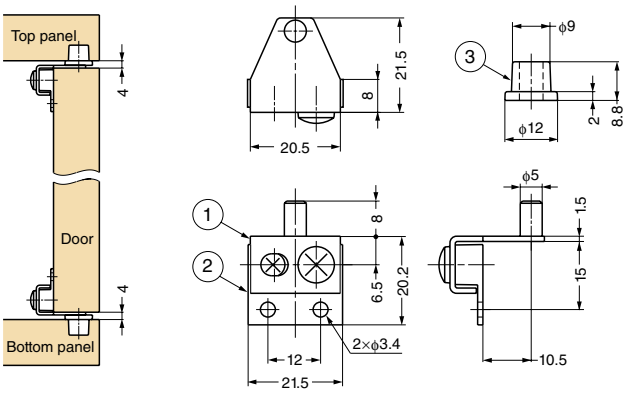

How to Adjust

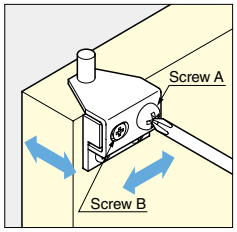

After loosening screw A, adjust by screwing B in the direction of the arrows.
Tighten screw A at final position.

No.	Part Name	Material	Finish/Colour
①	Body	Steel	Nickel
②	Hinge Plate	Zinc Alloy (ZDC)	Plain
③	Support	Polyamide (PA)	Black

Item Code	Item Name	Door Width	Door Height	Door Thickness	Door Weight	Weight	Box	Carton
170-090-621	PH084N	Max. 300	Max. 700	15 - 19	Max. 2 kg/2 pcs	19 g	500 pcs	1000 pcs

INSET GLASS DOOR PIVOT HINGE GPH

GPH-41HR/HL-G shown.

Remarks

- Please use in pairs. Can not be used separately.
  Left: For left-lower/right-upper
  Right: For right-lower/left-upper
- GPH-40R-G and GPH-40L-G should be used with the socket PHB4 (below).

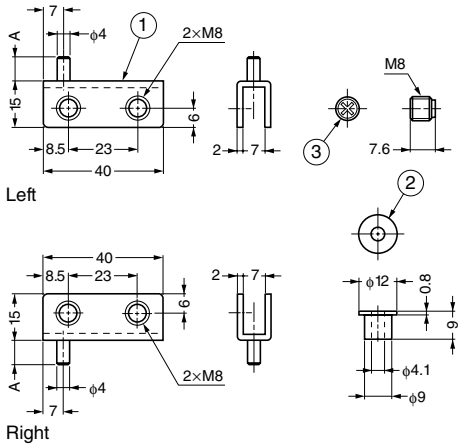

No.	Part Name	Material	Finish/Colour
①	Hinge	Steel	Paint/Black
②	Support	Polypropylene (PP)	Black
③	Screw	Steel	Black

Item Code	Item Name	Type	A	Door Width	Door Height	Glass Thickness	Door Weight	Weight	Box	Carton
170-080-032	GPH-40R-G	Right	4	Max. 450	Max. 700	4, 5	Max. 4 kg/pair	25 g	100 pcs	600 pcs
170-080-033	GPH-40L-G	Left	4	Max. 450	Max. 700	4, 5		25 g	100 pcs	600 pcs
170-080-030	GPH-41HR-G	Right	9	Max. 450	Max. 700	4, 5	Max. 4 kg/pair	25.5 g	100 pcs	1800 pcs
170-080-031	GPH-41HL-G	Left	9	Max. 450	Max. 700	4, 5		25.5 g	100 pcs	1800 pcs

SOCKET FOR GPH40 PIVOT HINGE L=R PHB4

Features

- Bottom socket for GHP-40 glass door hinge.
- Use GPH-41 hinge on upper side.

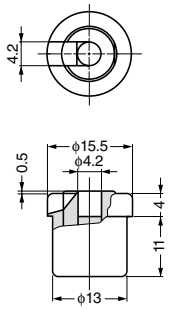

Installation

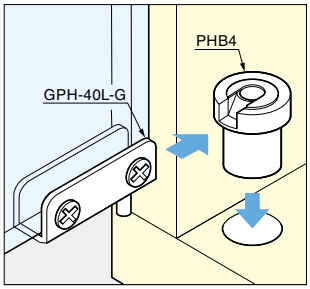

Item Code	Item Name	Material	Colour	Weight	Carton
170-083-509	PHB4	Polyamide (PA)	Black	5 g	400 pcs

Zwei L GLASS DOOR HINGE

STAINLESS 316 STEEL

STAINLESS

ZL-1703

Features

- Made of highly corrosion resistant SUS316
- Ultrapremium Zwei L finish. Zwei L finish: Using top class polishing technology, these products combine the elegance of Satin with the deep glow of a Mirror.
- Recommended for use in shower booths.
- Used as a pair.

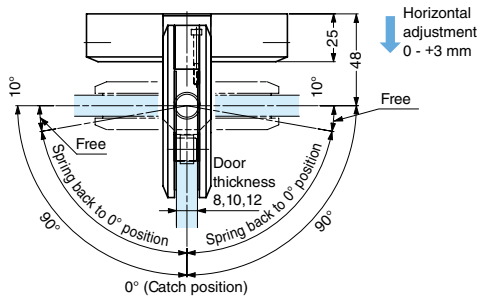

Cut Out Dimensions

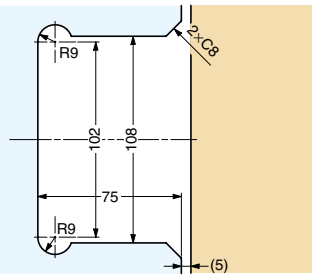

Parts Included

- Spacer × 6 pcs
  (Use 6 pcs for 8 mm/4 pcs for 10 mm/2 pcs for 12 mm.)
- Round head wood screw 6.2×56 (SUS) 4 pcs
- Plug MG-10×50P 4 pcs
- Allen key 4 1 pc
- Allen key 2.5 1 pc

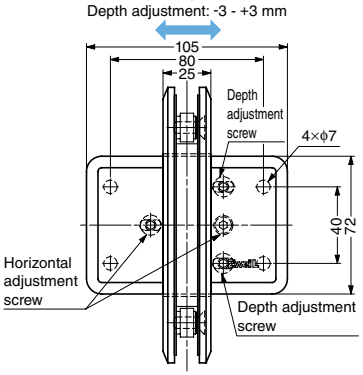

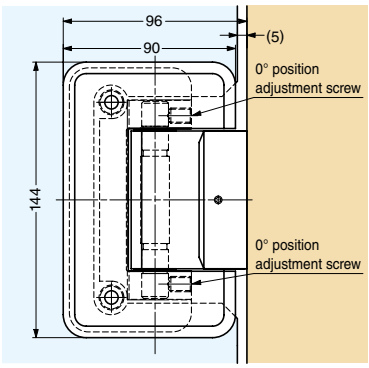

Item Code	Item Name	Material	Finish	Door Width	Door Height	Glass Thickness	Door Weight	Weight	Box
170-080-081	ZL-1703	Stainless Steel (SUS316)	Zwei L Finish	Max. 1000	Max. 2500	8, 10, 12	Max. 65 kg/2 pcs	2,656 g	1 pc

Zwei L GLASS DOOR HINGE

L=R STAINLESS 316 STEEL STAINLESS

ZL-1702

Features

- Made of highly corrosion resistant SUS316
- Ultrapremium Zwei L finish. Zwei L finish: Using top class polishing technology, these products combine the elegance of Satin with the deep glow of a Mirror.
- Used as a pair.

Parts Included

- Countersunk head screw 4.8×32
- Screw M5×16
- Allen key

Installation

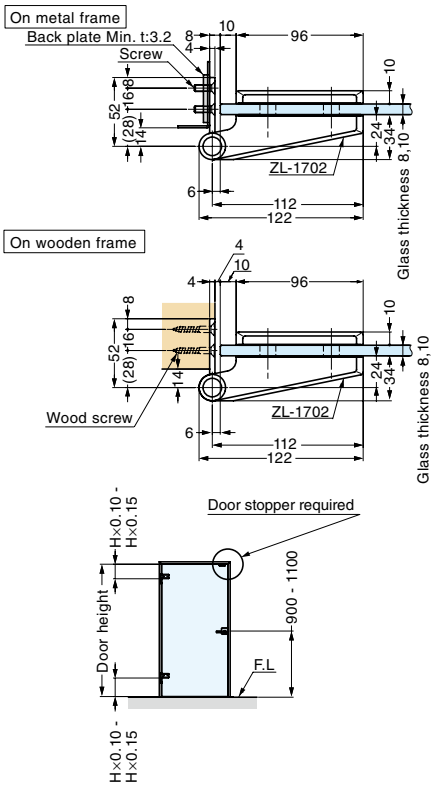

Cut Out Dimensions

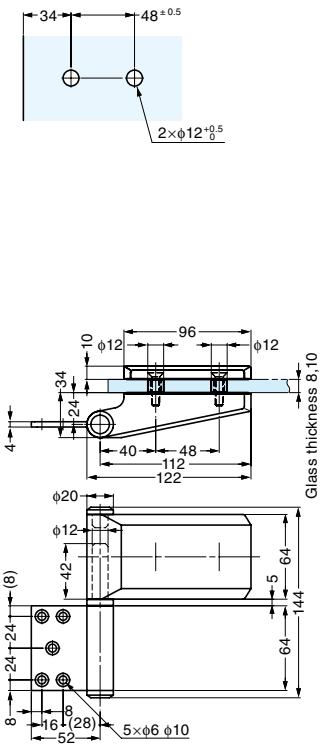

Case latch ZL-1601
(P.716)

Lever handles ZL-1101, ZL-1102, ZL-1103
(P.714 - 715)

Item Code	Item Name	Material	Finish	Door Width	Door Height	Glass Thickness	Door Weight	Weight	Box
170-183-400	ZL-1702	Stainless Steel (SUS316)	Zwei L Finish	Max. 900	Max. 2500	8, 10	Max. 50 kg/2 pcs	806 g	2 pcs

GLASS DOOR GRAVITY HINGE

STAINLESS 304 STEEL · STAINLESS

XL-GH02-120

XL-GH02-120R

Back Side View

XL-GH02-120L

Features

- Glass hinge made from stainless steel.
- Great solution for shower booths and other areas that come into contact with water.
- Successfully passed 300,000 open/close cycles in a private test.
- Within a radius of 170°, the hinge will automatically close the door.
- Door will stay in place past 170°.
- Door rises up to 5 mm at opening angle 90˚ and rises up to a maximum of 10 mm at 170°.

Remarks

Sold in pairs.

Parts Included

- Hexagon socket countersunk head screw M6×14 (SUS)
- Screw M5×16 (SUS)

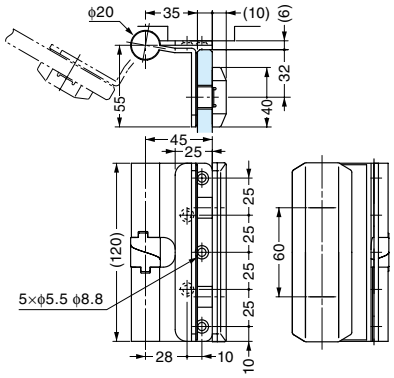

Left-hand opening shown.

Cut Out Dimensions

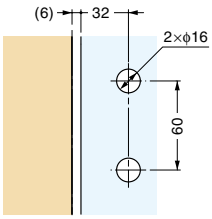

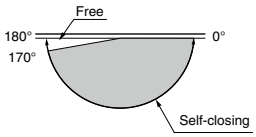

Item Code	Item Name	Type	Material	Finish	Door Width	Door Height	Glass Thickness	Door Weight	Weight	Box	Carton
170-180-850	XL-GH02-120R	Right	Stainless Steel (SUS304)	Mirror	Max. 750	Max. 2000	10, 12	Max. 45 kg/pair	1,254 g	1 pair	5 pairs
170-180-851	XL-GH02-120L	Left	Stainless Steel (SUS304)	Mirror	Max. 750	Max. 2000	10, 12	Max. 45 kg/pair	1,254 g	1 pair	5 pairs

GLASS DOOR GRAVITY HINGE

STAINLESS 304 STEEL · STAINLESS

XL-GH02F-120

XL-GH02F-120R

Back Side View

XL-GH02F-120L

Features

- Glass hinge made from stainless steel.
- Great solution for shower booths and other areas that come into contact with water.
- Successfully passed 100,000 open/close cycles in a private test.
- Automatically closing radius can be adjusted to either 20° or 70°.
- Door rises up to 1.5 mm at opening angle 20˚ and rises up to a maximum of 5 mm at 70°.

Remarks

Sold in pairs.

Parts Included

- Hexagon socket countersunk head screw M6×14 (SUS)
- Screw M5×16 (SUS)

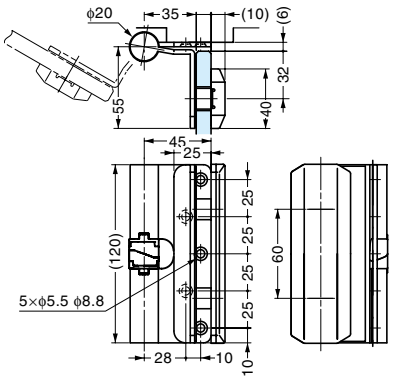

Left-hand opening shown.

Cut Out Dimensions

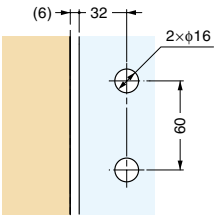

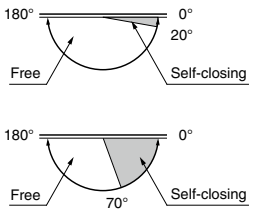

Item Code	Item Name	Type	Material	Finish	Door Width	Door Height	Glass Thickness	Door Weight	Weight	Box	Carton
170-021-703	XL-GH02F-120R	Right	Stainless Steel (SUS304)	Mirror	Max. 750	Max. 2000	10, 12	Max. 45 kg/pair	-	1 pair	5 pairs
170-021-702	XL-GH02F-120L	Left	Stainless Steel (SUS304)	Mirror	Max. 750	Max. 2000	10, 12	Max. 45 kg/pair	-	1 pair	5 pairs

GLASS DOOR GRAVITY HINGE

STAINLESS 304 STEEL

XL-GH05-120

XL-GH05-120R

Back Side View

Features

- Glass hinge made from stainless steel.
- Great solution for shower booths and other areas that come into contact with water.
- Successfully passed 100,000 open/close cycles in a private test.
- Within a radius of 170°, the hinge will automatically close the door.
- Door will stay in place past 170°.
- Door rises up to 5 mm at opening angle 90˚ and rises up to a maximum of 10 mm at 170°.

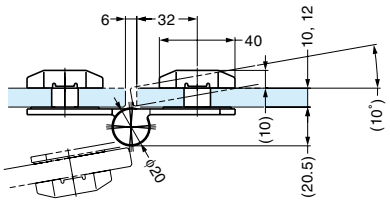

Remarks

Sold in pairs.

Parts Included

Hexagon socket countersunk head screw M6×14 (SUS)

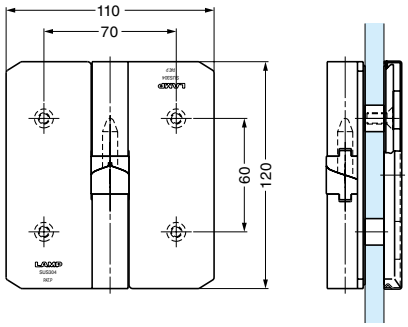

Left-hand opening shown.

Cut Out Dimensions

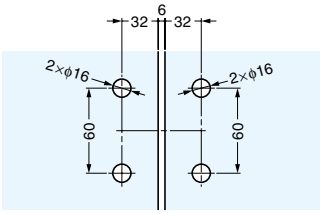

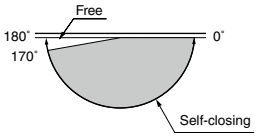

Item Code	Item Name	Type	Material	Finish	Door Width	Door Height	Glass Thickness	Door Weight	Weight	Box	Carton
170-016-523	XL-GH05-120R	Right	Stainless Steel (SUS304)	Mirror	Max. 750	Max. 2000	10, 12	Max. 45 kg/pair	1,624 g	1 pair	5 pairs
170-016-524	XL-GH05-120L	Left	Stainless Steel (SUS304)	Mirror	Max. 750	Max. 2000	10, 12	Max. 45 kg/pair	1,624 g	1 pair	5 pairs

GLASS DOOR GRAVITY HINGE

STAINLESS 304 STEEL

XL-GH05F-120

XL-GH05F-120R

Back Side View

Features

- Glass hinge made from stainless steel.
- Great solution for shower booths and other areas that come into contact with water.
- Successfully passed 100,000 open/close cycles in a private test.
- Automatically closing radius can be adjusted to either 20° or 70°.
- Door rises up to 1.5 mm at opening angle 20˚ and rises up to a maximum of 5 mm at 70°.

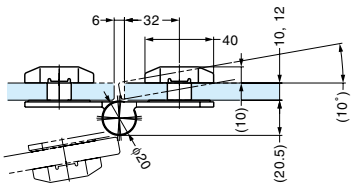

Remarks

Sold in pairs.

Parts Included

Hexagon socket countersunk head screw M6×14 (SUS)

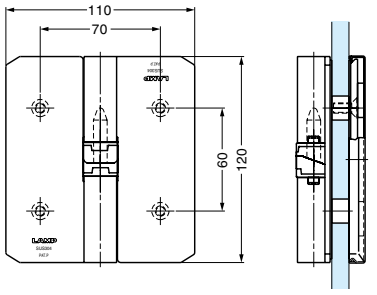

Left-hand opening shown.

Cut Out Dimensions

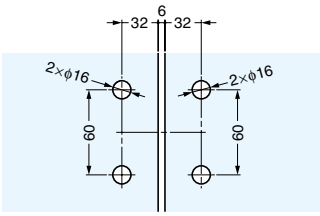

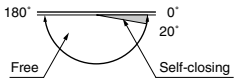

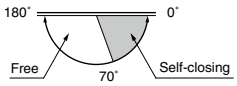

Item Code	Item Name	Type	Material	Finish	Door Width	Door Height	Glass Thickness	Door Weight	Weight	Box	Carton
170-021-705	XL-GH05F-120R	Right	Stainless Steel (SUS304)	Mirror	Max. 750	Max. 2000	10, 12	Max. 45 kg/pair	-	1 pair	5 pairs
170-021-704	XL-GH05F-120L	Left	Stainless Steel (SUS304)	Mirror	Max. 750	Max. 2000	10, 12	Max. 45 kg/pair	-	1 pair	5 pairs

GRAVITY HINGE

STAINLESS 304 STEEL

ET-100A

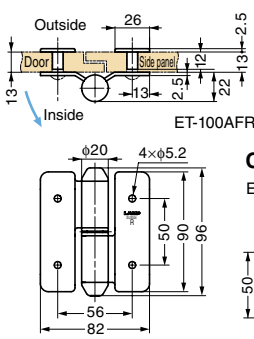

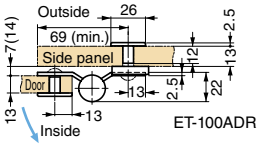

Cut Out Dimensions (At closed position)

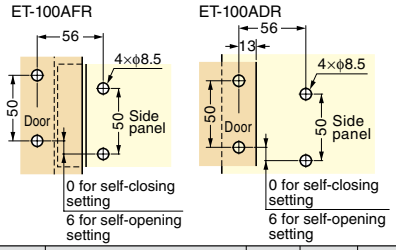

Features

- For inward opening doors. Can be installed with door flush or with an offset.
- The automatic closing radius of the door can be adjusted by angles of 18° (Must be adjusted during installation)
- Door rises up to 6mm at a radius of 90°.

Remarks

3 pcs in 1 set required for 1 door.

Parts Included

Spacer

Option

Spacer, ET-100-S13 to double the gap between door and side panel.

Recommended Screw

Hexagon top bolt

Type	Spacer	Door Thickness		Side Panel Thickness		
		13	16	13	16	20
ET-100AF	–	M5×10	M5×12	M5×10	M5×12	M5×16
ET-100AD	Parts Included	M5×10	M5×12	M5×14	M5×16	M5×20
	Option (ET-100-S13)	M5×10	M5×12	M5×20	M5×25	M5×25

Body

Item Code	Item Name	Type	Material	Finish	Weight	Box
170-099-066	ET-100AFR	Right	Stainless Steel (SUS304)	Satin	955 g	10 sets
170-099-067	ET-100AFL	Left	Stainless Steel (SUS304)	Satin	955 g	10 sets
170-099-905	ET-100ADR	Right	Stainless Steel (SUS304)	Satin	980 g	10 sets
170-099-048	ET-100ADL	Left	Stainless Steel (SUS304)	Satin	980 g	10 sets

Spacer for ET-100AD (Sold Separately)

Item Code	Item Name	Weight	Box
170-020-997	ET-100-S13	16 g	900 pcs

GRAVITY HINGE

STAINLESS 304 STEEL

ET-100BF

Features

- For outward opening doors. Can be installed with door flush or with an offset.
- The automatic closing radius of the door can be adjusted by angles of 18° (Must be adjusted during installation)
- Door rises up to 6mm at a radius of 90°.

Remarks

3 pcs in 1 set required for 1 door.

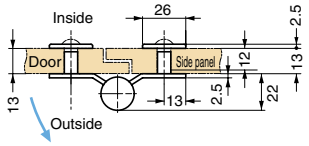

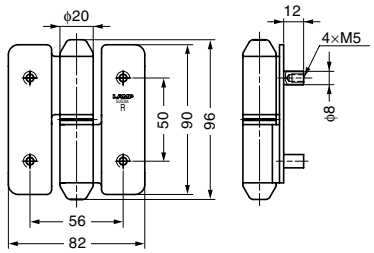

Cut Out Dimensions
(At closed position)

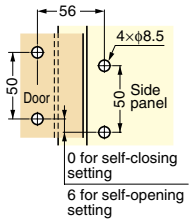

Recommended Screw

Hexagon top bolt

Door Thickness		Side Panel Thickness		
13	16	13	16	20
M5×10	M5×12	M5×10	M5×12	M5×16

Item Code	Item Name	Type	Material	Finish	Weight	Box
170-099-906	ET-100BFR	Right	Stainless Steel (SUS304)	Satin	956 g	10 sets
170-099-049	ET-100BFL	Left	Stainless Steel (SUS304)	Satin	956 g	10 sets

GRAVITY HINGE

STAINLESS 304 STEEL

ET-100CD

ET-100CDR

Spacer (Option)

Features

- For outward opening doors. Can be installed with door flush or with an offset.
- The automatic closing radius of the door can be adjusted by angles of 18° (Must be adjusted during installation)
- Door rises up to 6mm at a radius of 90°.

Remarks

3 pcs in 1 set required for 1 door.

Parts Included

Spacer

Recommended Screw

Hexagon top bolt

Door Thickness		Side Panel Thickness		
13	16	13	16	20
M5×10	M5×12	M5×14	M5×16	M5×20

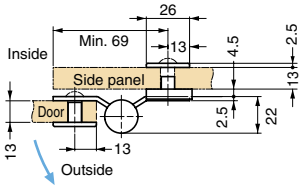

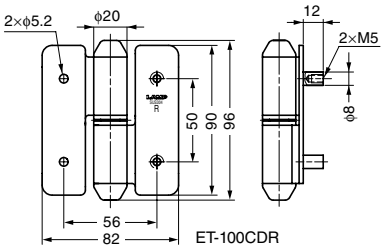

Cut Out Dimensions

(At closed position)

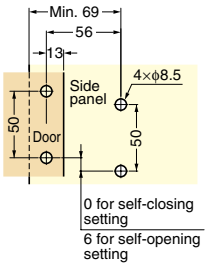

Item Code	Item Name	Type	Material	Finish	Weight	Box
170-099-907	ET-100CDR	Right	Stainless Steel (SUS304)	Satin	980 g	10 sets
170-099-050	ET-100CDL	Left	Stainless Steel (SUS304)	Satin	980 g	10 sets

APPLICATION

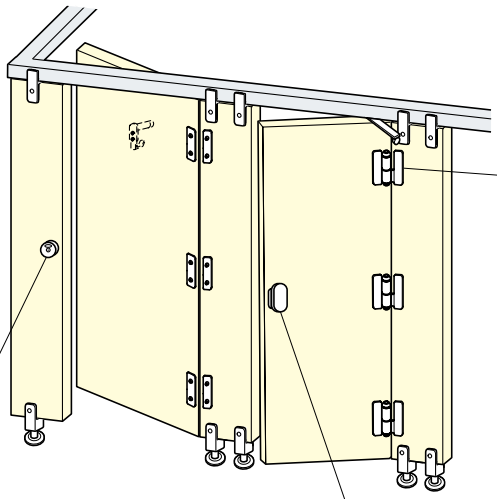

Hinge

ET-100A (P.466)

ET-100BF (P.466)

ET-100CD (above)

Latch

ET-70 (P.305 - 306)

ET-125T (P.305)

Knob

DW-50N (P.79)

HES Concealed Hinge Series Digest

Picture, Item Name	Door Width	Door Thickness	Door Weight	3-WAY Adjustment Function	Temporary Holding Feature	Page
NEW HES3D-70	Max. 600	Min. 19	Max. 9 kgf / 2 pcs Max. 12 kgf / 3 pcs	○	×	P.367-8
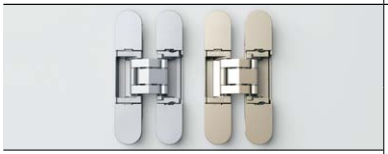 HES3D-90	Max. 600	Min. 23	Max. 12 kgf / 2 pcs Max. 16 kgf / 3 pcs	○	×	P.470
 HES3D-120	Max. 900	Min. 29	Max. 30 kgf / 2 pcs Max. 40 kgf / 3 pcs	○	○	P.471
 HES3D-V135LGR	Max. 600	Min. 19	Max. 9 kg / 2 pcs Max. 12 kg / 3 pcs	×	×	P.367-10
 HES3D-160	Max. 900	Min. 35	Max. 45 kgf / 2 pcs Max. 60 kgf / 3 pcs	○	○	P.472
NEW HES3D-E160	Max. 900	Min. 36	–	○	○	P.367-9
 HES3D-E190	Max. 900	Min. 38	Max. 100 kgf / 2 pcs Max. 125 kgf / 3 pcs	○	○	P.473
 HES3D-V135	Max. 900	Min. 30	Max. 55 kgf / 3 pcs	○	○	P.367-10
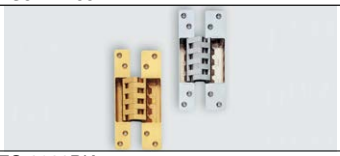 HES-3038BK	Max. 900	Min. 36	Max. 45 kgf / 3 pcs	×	×	P.476
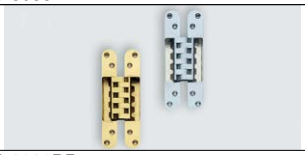 HES-3030BR	Max. 900	Min. 36	Max. 50 kgf / 3 pcs	×	×	P.476
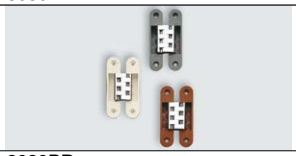 HES-3030PR	Max. 900	Min. 36	Max. 25 kgf / 3 pcs	×	×	P.477

HES CONCEALED HINGE SERIES

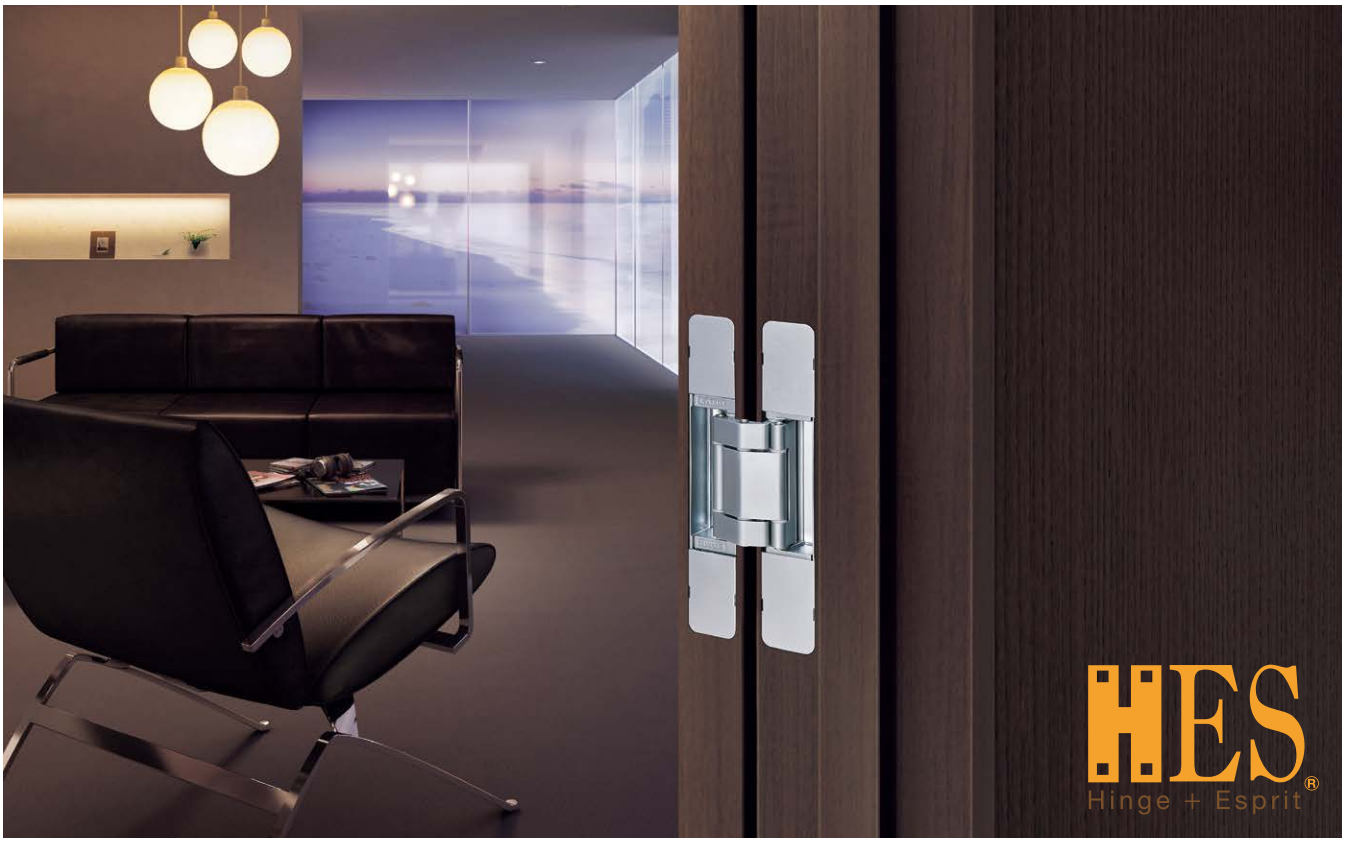

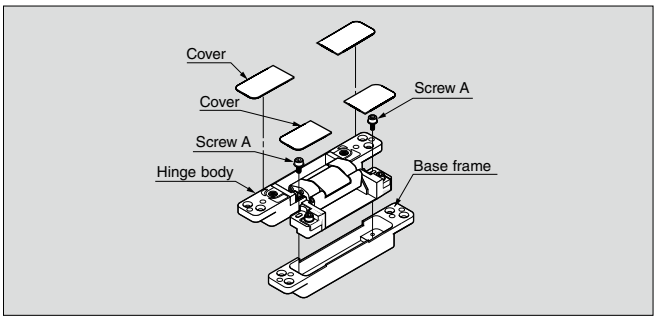

Features

- Hinges are completely hidden when door is closed.
- 3way adjustment function post installation: vertical, horizontal and depth adjustment
- Recommended for use with any of the following door dampers or door closer:

· LAPCON DOOR DAMPER LDD-S (P.720-721)
· LAPCON DOOR DAMPER LDD-V (P.718)
· LAPCON DOOR CLOSER LDC-N2 (P.722-724)

For Easy Installation

1. Separate parts as shown in picture "a".
2. Screw on the hinge body to door, and hinge bracket to door frame.
3. As shown in picture "b", insert hinge body straight into hinge bracket. Bracket will temporarily hold the body for easy installation.
4. Use "screw A" to fix body on bracket.
5. Adjust horizontally by turning "screw B".
6. Loosen "screw A" for vertical adjustment. Tighten "screw A" after vertical adjustment completed.
7. For depth adjustment, loosen "screw C" (one turn). Tighten "screw C" after completed.
8. Snap on plastic covers after all above completed.

Installation

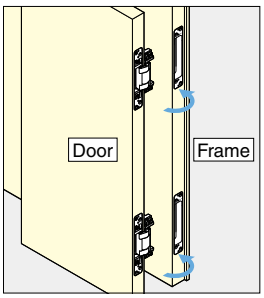

3-WAY Adjustment

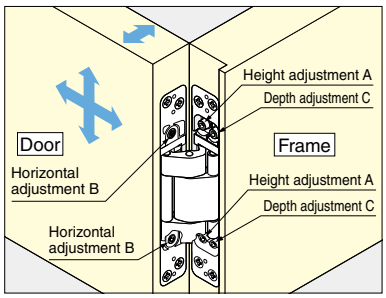

3-WAY ADJUSTABLE CONCEALED HINGE

L=R STEEL

HES3D-90

Features

- Thin profile allows for shallow mortise and makes installation easier
- Jig (sold separately) makes installation easy
- Vertical, horizontal and depth adjustment possible post-installation (3way)
- Can be split into two parts (one for the frame and one for the flap) making installation easy
- Custom colors available on request. Please contact us for details.
- Minimum door thickness: 23mm
- Max door width: 600mm
- Max door height: 1500mm (Can be used on taller doors if weight is within specifications)

Parts Included

Countersunk head screw 4×20 (4 pcs./hinge)
Hexagonal spanner ×2

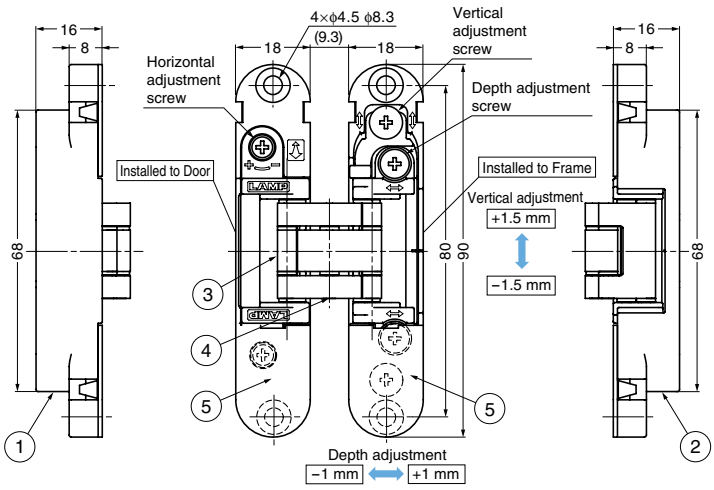

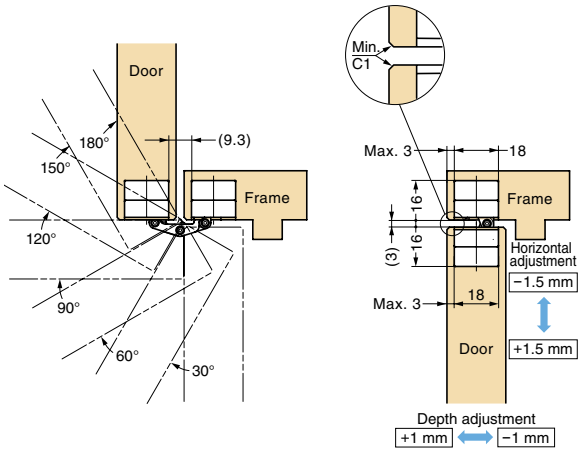

Cut Out Dimensions

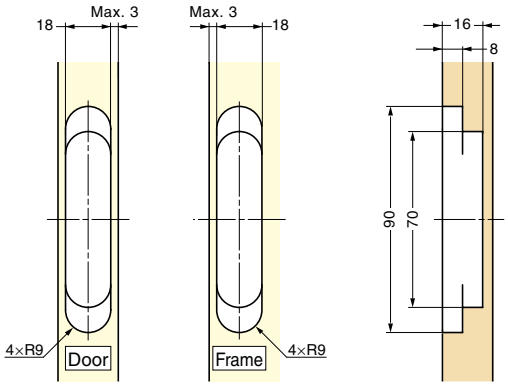

No.	Part Name	Material	Finish		
			DC	DN	BL
①	Body	Zinc Alloy (ZDC)	Satin Chrome	Satin Nickel	Black
②	Base Frame	Zinc Alloy (ZDC)	Satin Chrome	Satin Nickel	Black
③	Arm	Zinc Alloy (ZDC)	Satin Chrome	Satin Nickel	Black
④	Shaft	Stainless Steel	–	–	–
⑤	Cover	ABS	Satin Chrome	Satin Nickel	Black

Item Code	Item Name	Colour	Door Width	Door Height	Door Thickness	Door Weight		Opening Angle	Weight	Box	Carton
170-029-221	HES3D-90DC	Silver	Max. 600	Max. 1500	Min. 23	Max. 12 kg/2 pcs	Max. 16 kg/3 pcs	180˚	198 g	2 pcs	48 pcs
170-029-222	HES3D-90DN	Champagne Gold	Max. 600	Max. 1500	Min. 23	Max. 12 kg/2 pcs	Max. 16 kg/3 pcs	180˚	198 g	2 pcs	48 pcs
170-033-588	HES3D-90BL	Black	Max. 600	Max. 1500	Min. 23	Max. 12 kg/2 pcs	Max. 16 kg/3 pcs	180˚	198 g	2 pcs	48 pcs

3-WAY ADJUSTABLE CONCEALED HINGE

L=R STEEL

HES3D-120

Features

- Thin profile (21mm) allows for shallow mortise.
- Jig (sold separately) makes installation easy.
- Vertical, horizontal and depth adjustment possible post-installation (3way).
- Passed a 300,000 open/close cycle test in private testing.
- Can be split into two parts (one for the frame and one for the flap) making installation easy
- Temporary holding feature: can temporarily be hung and hold position without being affixed with screws. This makes installation much easier.
- Custom colors available on request. Please contact us for details.
- Max door weight: 30kg/2pc, 40kg/3pc
- Min. door thickness: 29mm
- Max door width: 900mm
- Max door height: 2400mm (recommended. Larger doors can be used if the weight is within specification)

Remarks

Recommend to use with bellow door closer/ damper as bellow.
· LAPCON DOOR DAMPER LDD-S (P.720-721)
· LAPCON DOOR DAMPER LDD-V (P.718)

Video Link

Parts Included

- Countersunk head tapping screw 5×20
- Hex. wrench (a nominal diameter 3)

Sold Separately

- Installation template HES3D-120-TMP (P.474)
- Metal door bracket 120BKT (P.475)

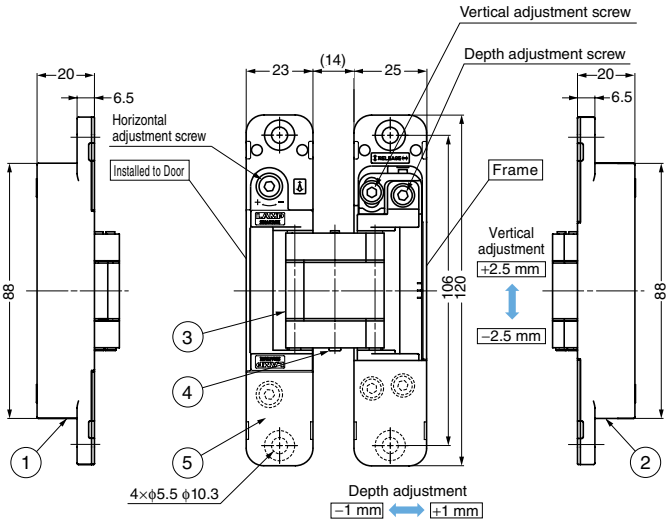

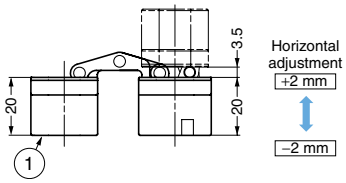

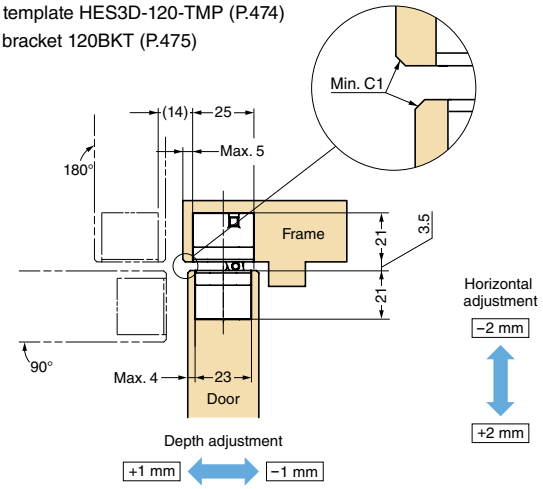

Cut Out Dimensions

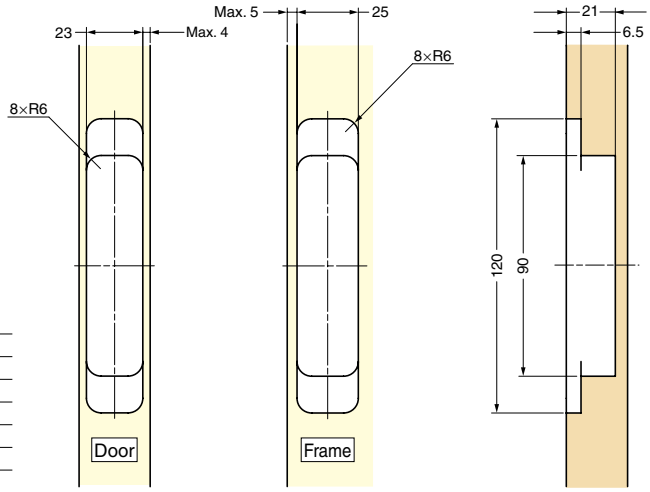

No.	Part Name	Material	Finish/Colour		
			DC	DN	BL
①	Body	Zinc Alloy (ZDC)	Satin Chrome	Satin Nickel	Black
②	Base Frame	Zinc Alloy (ZDC)	Satin Chrome	Satin Nickel	Black
③	Arm	Zinc Alloy (ZDC)	Satin Chrome	Satin Nickel	Black
④	Shaft	Stainless Steel	–	–	–
⑤	Cover (2 pairs)	ABS	Satin Chrome	Satin Nickel	Black

Item Code	Item Name	Colour	Door Width	Door Height	Door Thickness	Door Weight		Opening Angle	Weight	Box	Carton
170-022-086	HES3D-120DC	Silver	Max. 900	Max. 2400	Min. 29	Max. 30 kg/2 pcs	Max. 40 kg/3 pcs	180˚	401 g	2 pcs	24 pcs
170-022-087	HES3D-120DN	Champagne Gold	Max. 900	Max. 2400	Min. 29	Max. 30 kg/2 pcs	Max. 40 kg/3 pcs	180˚	401 g	2 pcs	24 pcs
170-022-088	HES3D-120BL	Black	Max. 900	Max. 2400	Min. 29	Max. 30 kg/2 pcs	Max. 40 kg/3 pcs	180˚	401 g	2 pcs	24 pcs

3-WAY ADJUSTABLE CONCEALED HINGE

L=R STEEL

HES3D-160

Features

- Thin profile allows for shallow mortise and makes installation easier
- Jig (sold separately) makes installation easy.
- Vertical, horizontal and depth adjustment possible post-installation (3way).
- Temporary holding feature: can temporarily be hung and hold position without being affixed with screws. This makes installation much easier.
- Passed a 300,000 open/close cycle test in private testing.
- Max door weight: 45kg/2pc, 60kg/3pc
- Min. door thickness: 35mm
- Max door width: 900mm
- Max door height: 2400mm (recommended. Larger doors can be used if the weight is within specification)

Remarks

Recommend to use with bellow door closer/ damper as bellow.

· LAPCON DOOR DAMPER LDD-S (P.720-721)

· LAPCON DOOR DAMPER LDD-V (P.718)

· LAPCON DOOR DAMPER LDC-N2 (P.722-724)

*For using stopper function of LDC, please install door holder separately at the stop position.

Parts Included

- Countersunk head wood screw 4.8×25
- Hex. wrench (a nominal diameter 4)

Sold Separately

Installation template HES3D-160-TMP (P.474)

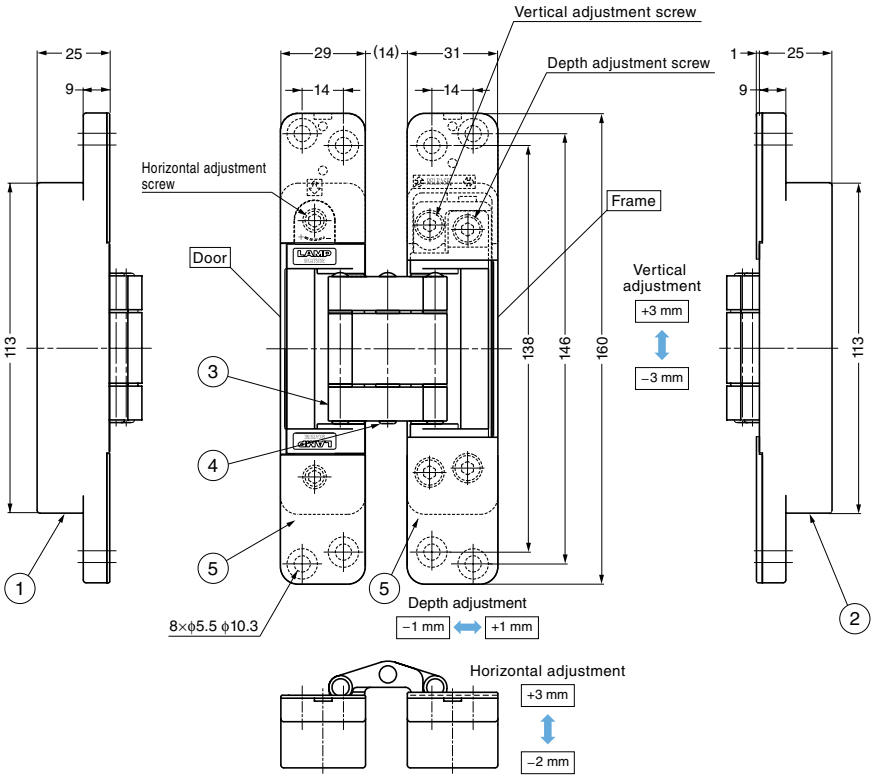

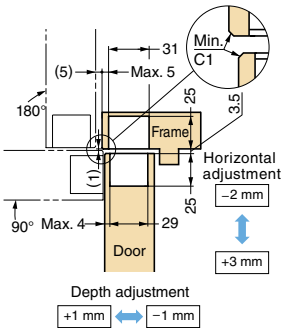

Cut Out Dimensions

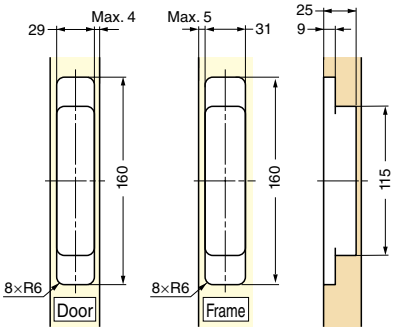

No.	Part Name	Material	Finish	
			SL	GL
①	Body	Zinc Alloy (ZDC)	Silver	Gold
②	Base Frame	Zinc Alloy (ZDC)	Silver	Gold
③	Arm	Zinc Alloy (ZDC)	Silver	Gold
④	Shaft	Stainless Steel	–	–
⑤	Cover (2 pairs)	ABS	Paint/Silver	Paint/Gold

Video Link

Item Code	Item Name	Colour	Door Width	Door Height	Door Thickness	Door Weight		Opening Angle	Weight	Box	Carton
170-091-009	HES3D-160SL	Silver	Max. 900	Max. 2400	Min. 35	Max. 45 kg/2 pcs	Max. 60 kg/3 pcs	180˚	756 g	2 pcs	12 pcs
170-091-010	HES3D-160GL	Gold	Max. 900	Max. 2400	Min. 35	Max. 45 kg/2 pcs	Max. 60 kg/3 pcs	180˚	756 g	2 pcs	12 pcs

3-WAY ADJUSTABLE CONCEALED HINGE

L=R STEEL

HES3D-E190

Features

- Thin profile allows for shallow mortise and makes installation easier
- Jig (sold separately) makes installation easy.
- Has a fire safety rating of ANSI/UL 10C, CAN/ULC-S104
- Vertical, horizontal and depth adjustment possible post-installation (3way)
- Can be split into two parts (one for the frame and one for the flap) making installation easy
- Temporary holding feature: can temporarily be hung and hold position without being affixed with screws. This makes installation much easier.
- Custom colors available on request. Please contact us for details.
- Passed a 300,000 open/close cycle test in private testing.

Parts Included

- Countersunk head screw 5×30 (4 pcs/hinge)
- Allen key size 4

Sold Separately

- Installation template HES3D-E190-TMP (P.474)
- Metal door bracket E190BKT (P.475)

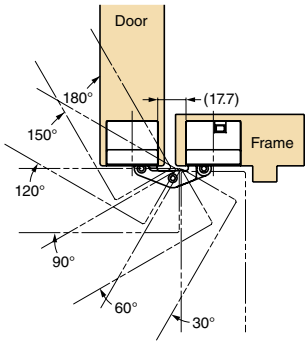

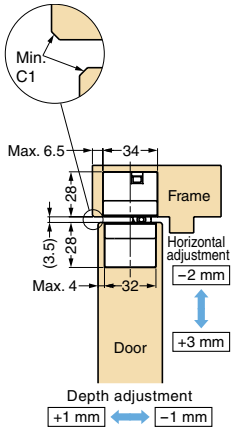

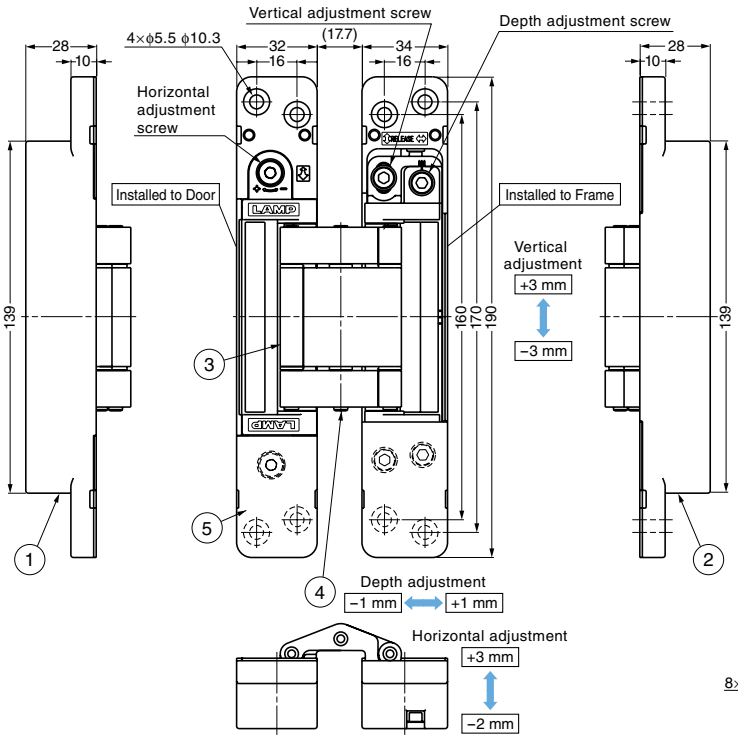

Cut Out Dimensions

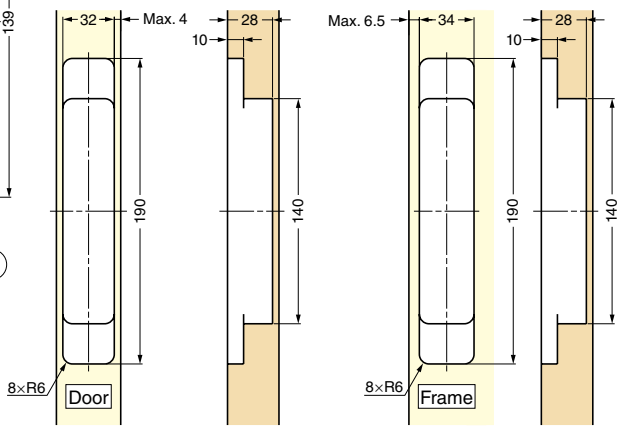

No.	Part Name	Material	Finish/Colour		
			DC	DN	BL
①	Body	Zinc Alloy (ZDC)	Satin Chrome	Satin Nickel	Black
②	Base Frame	Zinc Alloy (ZDC)	Satin Chrome	Satin Nickel	Black
③	Arm	Aluminum Alloy	Satin Chrome	Satin Nickel	Black
④	Shaft	Stainless Steel	Plain	Plain	Plain
⑤	Cover	ABS	Satin Chrome	Satin Nickel	Black

Video Link

Item Code	Item Name	Colour	Door Width	Door Height	Door Thickness	Door Weight		Opening Angle	Weight	Box	Carton
170-025-498	HES3D-E190DC	Silver	Max. 900	Max. 2400	Min. 38 mm	Max. 100 kg/2 pcs	Max. 125 kg/3 pcs	180˚	1,113 g	2 pcs	12 pcs
170-025-499	HES3D-E190DN	Champagne Gold	Max. 900	Max. 2400	Min. 38 mm	Max. 100 kg/2 pcs	Max. 125 kg/3 pcs	180˚	1,113 g	2 pcs	12 pcs
170-025-539	HES3D-E190BL	Black	Max. 900	Max. 2400	Min. 38 mm	Max. 100 kg/2 pcs	Max. 125 kg/3 pcs	180˚	1,113 g	2 pcs	12 pcs

COLOUR CUSTOMIZATION FOR HES CONCEALED HINGES

Possible to customize the colour for special requirements.

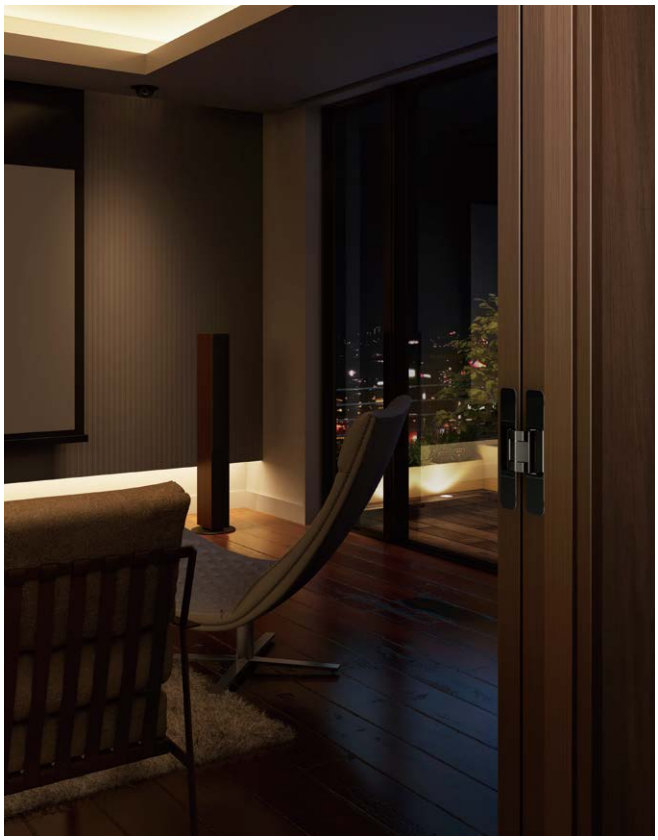

INSTALLATION TEMPLATE

HES3D-TMP

Features

- Installation template for HES3D hinges.
- The HES3D-70-TMP and HES3D-90-TMP are now available.

Remarks

- The HES3D-120TMP, HES3D-160-TMP, HES3D-E190-TMP, and HES3D-V135-TMP are sold in pairs, one for the door and one for the frame.
- The HES3D-70TMP and HES3D-90-TMP are sold singly, because they can be used on both the door and frame.
- Recommended working tool is a straight bit with guide bearings of which guide diameter and bit diameter are the same.

Sold Separately

- HES3D-70 (Additional products digital catalog, P.F5)
- HES3D-90 (P.470)
- HES3D-120 (P.471)
- HES3D-160 (P.472)
- HES3D-E190 (P.473)
- HES3D-V135LGR (P.703)

Item Code	Item Name	Applicable Hinge	Material	Colour
170-040-988	HES3D-70-TMP	HES3D-70	Methacrylic Resin (PMMA)	Clear
170-029-034	HES3D-90-TMP	HES3D-90	Methacrylic Resin (PMMA)	Clear
170-024-569	HES3D-120-TMP	HES3D-120	Methacrylic Resin (PMMA)	Clear
170-024-570	HES3D-160-TMP	HES3D-160	Methacrylic Resin (PMMA)	Clear
170-028-808	HES3D-E190-TMP	HES3D-E190	Methacrylic Resin (PMMA)	Clear
170-024-572	HES3D-V135-TMP	HES3D-V135LGR	Methacrylic Resin (PMMA)	Clear

BRACKET OF HES3D-120 FOR SHEET METAL HES3D-120BKT

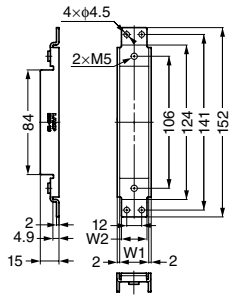

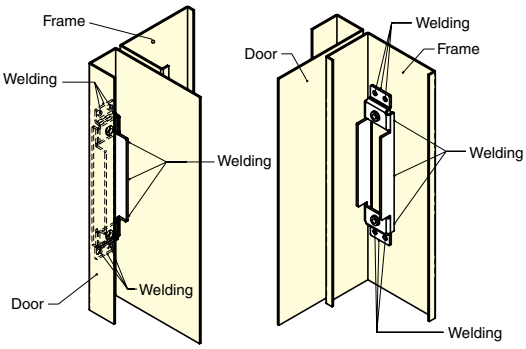

Features

Bracket to use HES3D-120 hinge (P.471) with sheet metal.

Installation

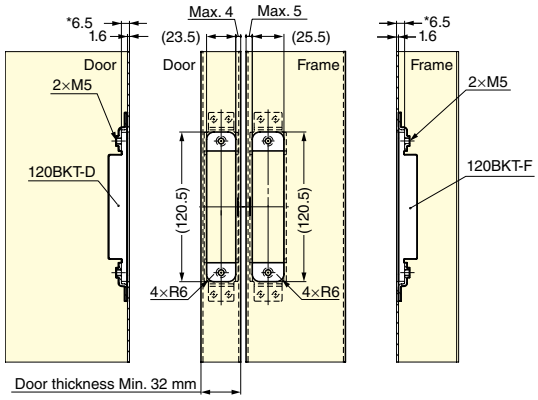

*Dimensions: For flat surface in case of 1.6 mm thick sheet metal.

Item Code	Item Name	Type	Material	Finish/Colour	W1	W2	Weight	Carton
170-032-739	HES3D-120BKT-D	For Door	Steel (SPCC)	Zinc Chromate	23.3	20.5	58 g	50 pcs
170-032-740	HES3D-120BKT-F	For Frame			25.3	22.5	58 g	50 pcs

BRACKET OF HES3D-E190 FOR SHEET METAL HES3D-E190BKT

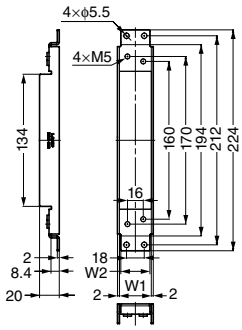

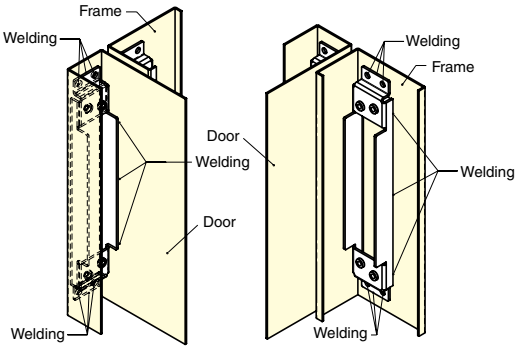

Features

Bracket to use HES3D-E190 hinge (P.473) with sheet metal.

Installation

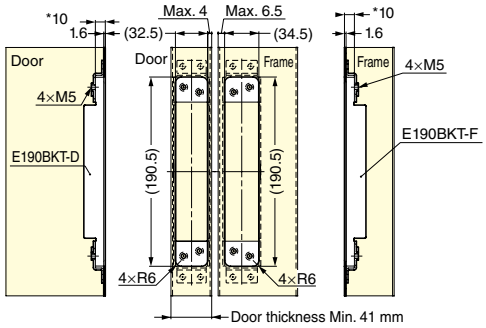

*Dimensions: For flat surface in case of 1.6 mm thick sheet metal.

Item Code	Item Name	Type	Material	Finish/Colour	W1	W2	Weight	Carton
170-032-741	HES3D-E190BKT-D	For Door	Steel (SPCC)	Zinc Chromate	32.3	29.5	135 g	50 pcs
170-032-742	HES3D-E190BKT-F	For Frame			34.3	31.5	135 g	50 pcs

CONCEALED HINGE

L=R STEEL

HES-3038BK

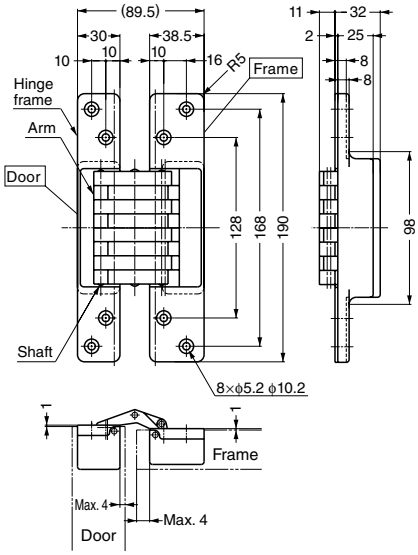

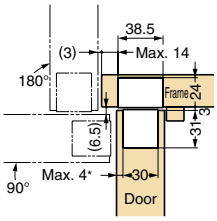

Features

Finish available in rich polished brass or sleek stain chrome.

Remarks

- Recommend to use 3 pcs per one door.
- Secure to check the dimension of * marked on bellow drawings.

Parts Included

Countersunk head tapping screw 5×26

Cut Out Dimensions

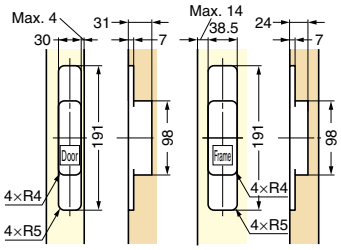

Item Code	Item Name	Material	Finish	Door Width	Door Height	Door Thickness	Door Weight	Opening Angle	Weight	Box	Carton
170-091-013	HES-3038BK PB	Brass	Polished	Max. 900	Max. 2000	Min. 36	Max. 45 kg/3 pcs	180˚	1360 g	2 pcs	20 pcs
170-091-015	HES-3038BK SC	Brass	Satin Chrome	Max. 900	Max. 2000	Min. 36	Max. 45 kg/3 pcs	180˚	1360 g	2 pcs	20 pcs

CONCEALED HINGE

L=R STEEL

HES-3030BR

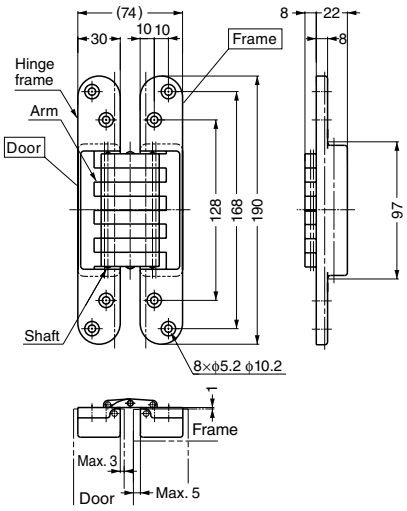

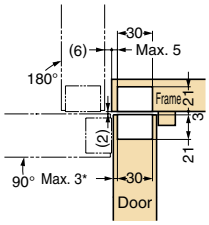

Features

Finish available in rich polished brass or sleek stain chrome.

Remarks

- Recommend to use 3 pcs per one door.
- Secure to check the dimension of * marked on bellow drawings.

Parts Included

Countersunk head tapping screw 5×26

Cut Out Dimensions

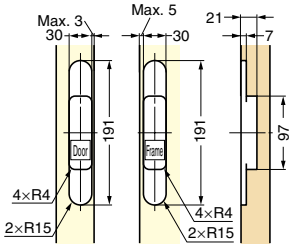

Item Code	Item Name	Material	Finish	Door Width	Door Height	Door Thickness	Door Weight	Opening Angle	Weight	Box	Carton
170-091-003	HES-3030BR PB	Brass	Polished	Max. 900	Max. 2000	Min. 36	Max. 50 kg/3 pcs	180˚	1030 g	2 pcs	20 pcs
170-091-014	HES-3030BR SC	Brass	Satin Chrome	Max. 900	Max. 2000	Min. 36	Max. 50 kg/3 pcs	180˚	1030 g	2 pcs	20 pcs

CONCEALED HINGE

L=R STEEL

HES-3030PR

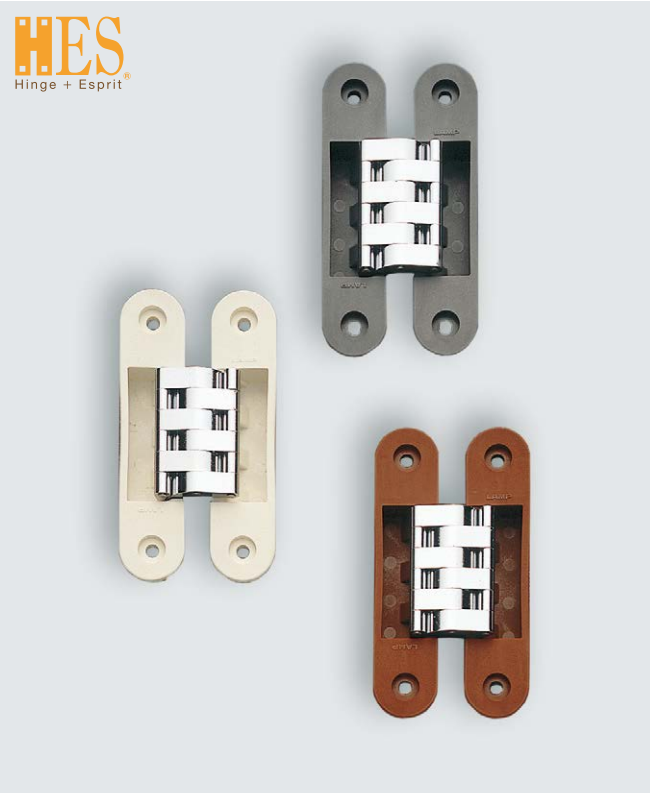

Features

Concealed hinge for small cabinet door or partition.

Remarks

Recommend to use 3 pcs per one door.

Parts Included

Binding head tapping screw 6×20

Caution

Secure to check the dimension of * marked on bellow drawings.

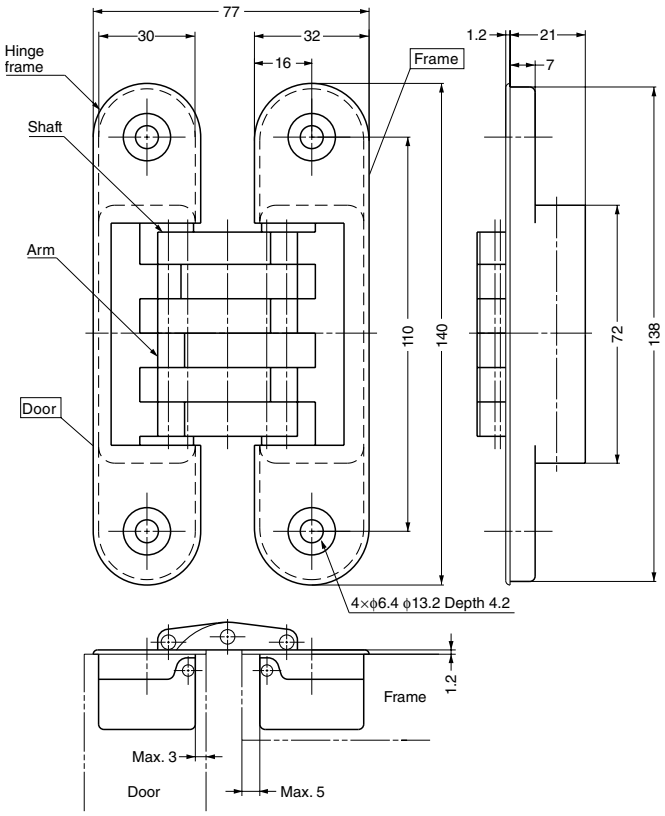

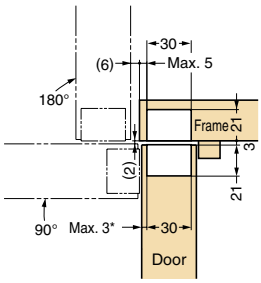

Cut Out Dimensions

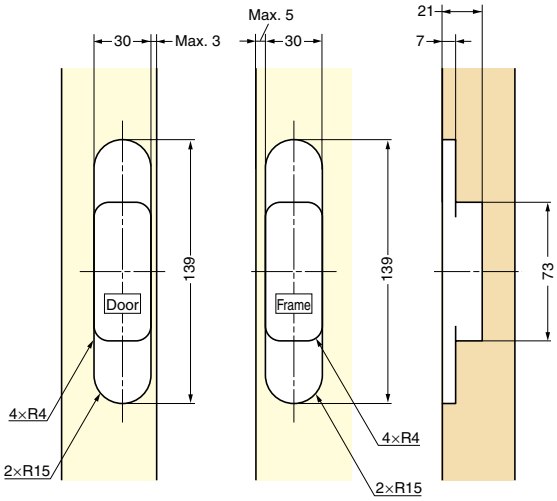

Item Code	Item Name	Finish/Colour	Material	Door Width	Door Height	Door Thickness	Door Weight	Opening Angle	Weight	Box	Carton
170-091-006	HES-3030PR WT	White, Chrome	PBT/Brass	Max. 900	Max. 2000	Min. 36	Max. 25 kg/3 pcs	180˚	320 g	5 pcs	40 pcs
170-091-004	HES-3030PR BR	Brown, Chrome	PBT/Brass	Max. 900	Max. 2000	Min. 36	Max. 25 kg/3 pcs	180˚	320 g	5 pcs	40 pcs
170-091-005	HES-3030PR GR	Grey, Chrome	PBT/Brass	Max. 900	Max. 2000	Min. 36	Max. 25 kg/3 pcs	180˚	320 g	5 pcs	40 pcs

CONCEALED HINGE

L=R

INO-66N

Features

Front plate is made of stainless steel 304.

Remarks

- For using 3 pcs per one door, distance between top hinge and centre hinge must be 200 mm.
- Distance between door edge and hinge (marked * on below drawings) must be less than 4 mm.

Recommended Screw

Countersunk head wood screw 5.8

Cut Out Dimensions

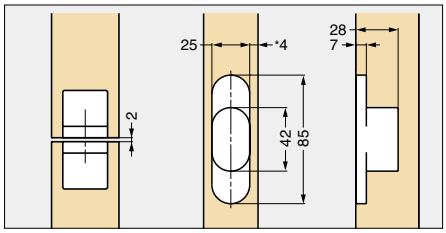

Installation

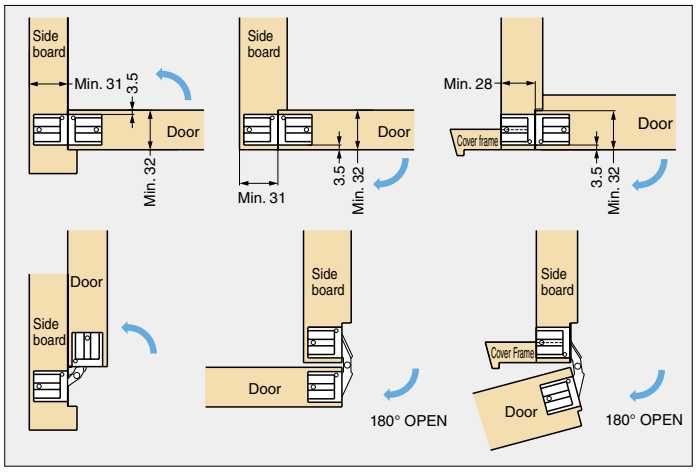

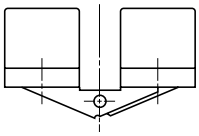

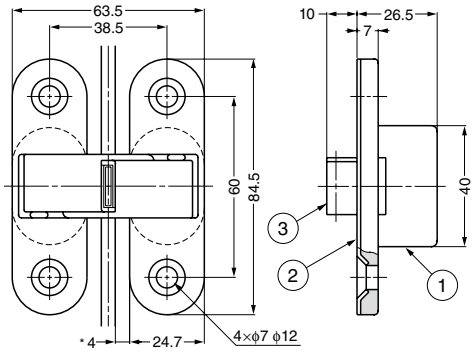

No.	Part Name	Material	Finish
①	Body	Polyamide (PA)	–
②	Front Plate	Stainless Steel (SUS304)	Satin
③	Arm	Stainless Steel (SUS304)	–

Item Code	Item Name	Door Width	Door Height	Door Weight		Opening Angle	Weight	Box	Carton
170-095-018	*1 INO-66N	Max. 800	Max. 2100	Max. 30 kg/2 pcs	Max. 50 kg/3 pcs	180°	100 g	24 pcs	144 pcs

*1 Item name has been revised. (Old item name : I-66)

2-WAY ADJUSTABLE PIVOT HINGE

STEEL

PH-01

Features

- Hinge position adjustable without removing door.
- Sold in pairs (for top and bottom).

Parts Included

Countersunk head tapping screw 4×30

Vertical Adjustment

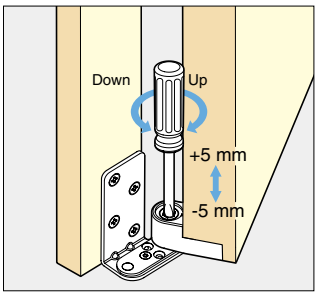

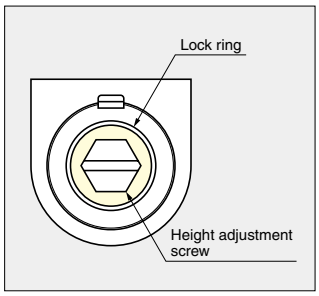

1. Remove the cover cap.
2. Loosen hex lock ring.
3. Adjust by turning slotted screw.
4. Tighten hex lock ring.
5. Put the cover cap.

Cut Out Dimensions

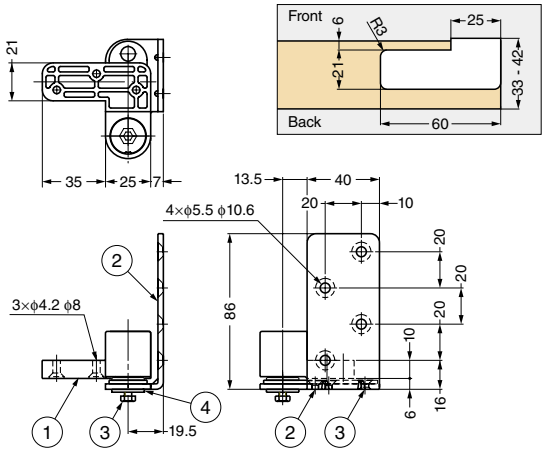

Lateral Adjustment

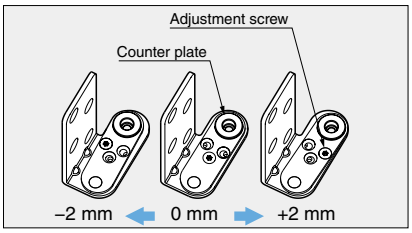

Door Installation

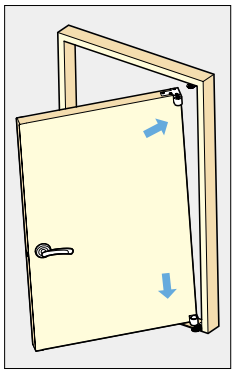

1. Insert bottom hinge to the bracket.
2. Install door while pushing the shaft of upper hinge.
3. Secure to check the door is fixed with the frame.

Locking Mechanism

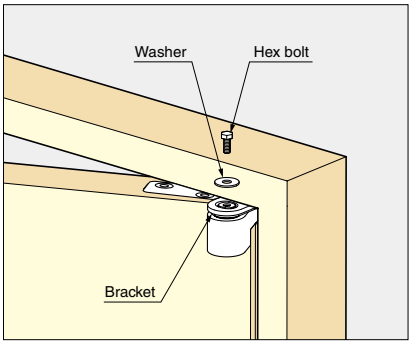

Hex bolt holds the door and prevents the door falling off unexpectedly.

No.	Part Name	Material	Finish/Colour
①	Body	Zinc Alloy (ZDC)	Matte Silver
②	Bracket	Stainless Steel (SUS304)	Polished
③	Hex Bolt	Stainless Steel (SUS304)	–
④	Washer	Stainless Steel (SUS304)	–
⑤	Cover	ABS	White

Item Code	Item Name	Door Width	Door Height	Door Thickness	Door Weight	Weight	Box	Carton
170-090-622	PH-01	Max. 850	Max. 2300	33 - 42	Max. 35 kg/pair	593 g	1 pair	20 pairs

Zwei L LIFT-OFF HINGE

L=R STAINLESS 316 STEEL STAINLESS

ZL-1701

Features

- Made of highly corrosion resistant SUS316
- Ultrapremium Zwei L finish. Zwei L finish: Using top class polishing technology, these products combine the elegance of Satin with the deep glow of a Mirror.
- Oil-free ring provides smooth movement.

Remarks

Insert spacer between door and frame.

Parts Included

ZL-1701-10

- Countersunk head wood screw 4.1×38 (SUS)
- Countersunk head screw M5×16, ϕ8 (SUS) (For Metal Doors)

ZL-1701-12

- Countersunk head wood screw 4.8×38 (SUS)
- Countersunk head screw M5×16, ϕ9 (SUS) (For Metal Doors)

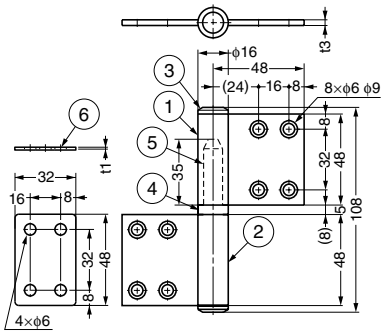

ZL-1701-10

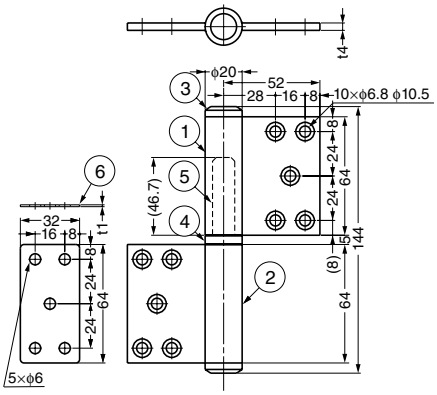

ZL-1701-12

Installation for Wooden Door

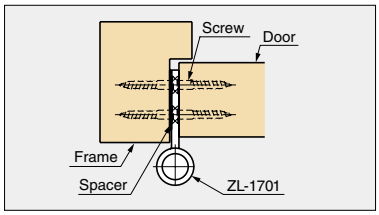

Installation for Metal Door

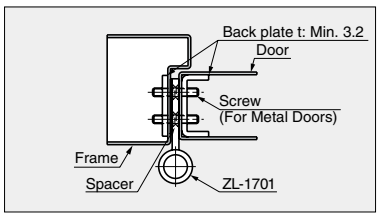

No.	Part Name	Material	Finish
①	Door Side Hinge Plate	Stainless Steel (SUS316)	Zwei L Finish
②	Frame Side Hinge Plate	Stainless Steel (SUS316)	Zwei L Finish
③	Head Cap	Stainless Steel (SUS316)	Zwei L Finish
④	Washer	Stainless Steel (SUS316)	Satin
⑤	Shaft	Stainless Steel (SUS316)	Plain
⑥	Spacer	Stainless Steel (SUS316)	Plain

Item Code	Item Name	Load Capacity		Weight	Box
170-091-691	ZL-1701-10	392 N/2 pcs	40 kgf/2 pcs	305 g	8 pcs
170-091-690	ZL-1701-12	490 N/2 pcs	50 kgf/2 pcs	560 g	6 pcs

LIFT-OFF HINGE

L=R STAINLESS STAINLESS 304 STEEL

S-6173-2, S-6166-2

S-6173-2

S-6166-2-R S-6166-2-L

Features

- Screw holes are countersunk from both sides.
- Non-handed.
- Door weight: Max. 40 kg/pair
- Weld-on type (w/o screw hole) is also available.

Parts Included

Countersunk head tapping screw M4×20 (SUS)

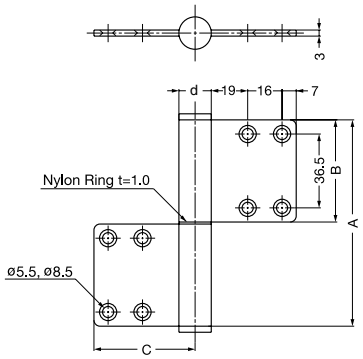

Material	Finish
304 Stainless Steel	Satin

Item Code	Item Name	A	B	C	d	Weight	Box	Carton
170-099-404	S-6173-2	102	50.5	50	ϕ16	240 g	12 pcs	60 pcs

Weld-on Type

Item Code	Item Name	Type	A	B	C	d	Weight	Box	Carton
170-099-400	S-6166-2-L	Left	102	49.5	55	ϕ18 (ϕ17)	300	12 pcs	60 pcs
170-099-401	S-6166-2-R	Right							

LIFT-OFF HINGE

L=R STAINLESS STAINLESS 304 STEEL

S-6173-5, S-6166-6

S-6173-5

S-6166-6-R S-6166-6-L

Features

- Screw holes are countersunk from both sides.
- Non-handed.
- Door weight: Max. 50 kg/pair
- Weld-on type (w/o screw hole) is also available.

Parts Included

Countersunk head tapping screw M4×20 (SUS)

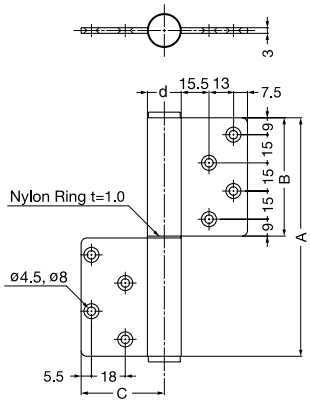

Material	Finish
304 Stainless Steel	Satin

Item Code	Item Name	A	B	C	d	Weight	Box	Carton
170-099-405	S-6173-5	127	63	45	ϕ18	330 g	8 pcs	40 pcs

Weld-on Type

Item Code	Item Name	Type	A	B	C	d	Weight	Box	Carton
170-099-402	S-6166-6-L	Left	152	74.5	55	ϕ20 (ϕ17)	570	8 pcs	40 pcs
170-099-403	S-6166-6-R	Right							

BUTT HINGE

L=R STAINLESS 304 STEEL STEEL

3535SS, 4040SS

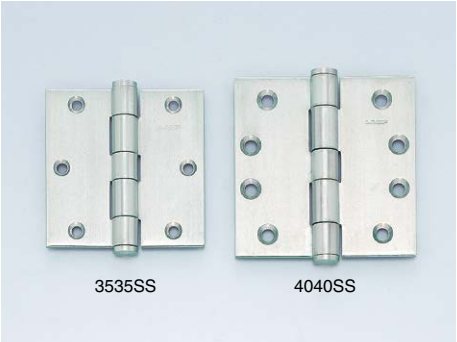

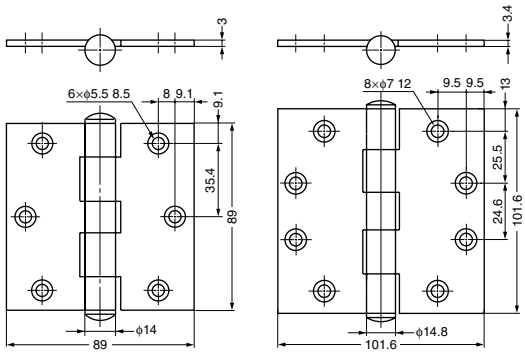

Parts Included

3535SS : Countersunk wood head screw 4.5×25
4040SS : Countersunk wood head screw 5.5×32

Item Code	Item Name	Material	Finish	Door Weight	Weight	Box	Carton
170-920-181	3535SS	Stainless Steel (SUS304)	Satin	Max. 25 kg/2 pcs	270 g	2 pcs	100 pcs
170-920-182	4040SS	Stainless Steel (SUS304)	Satin	Max. 40 kg/2 pcs	390 g	2 pcs	50 pcs

BUTT HINGE (W/ WASHER)

L=R STAINLESS 304 STEEL STAINLESS

3535WSS, 4040WSS

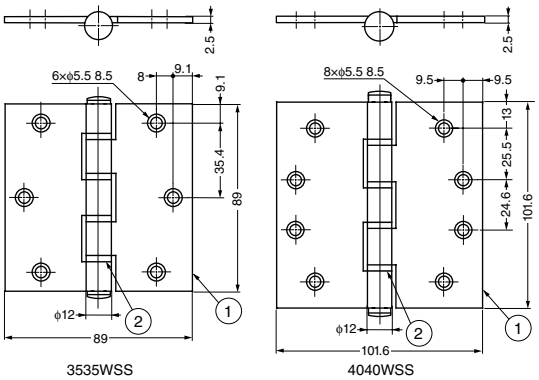

Features

Washer prevents metal-to-metal contact.

Parts Included

Countersunk head tapping screw 4×25 (SUS)

No.	Part Name	Material	Finish/Colour
①	Body	Stainless Steel (SUS304)	Satin
②	Washer	Polyamide (PA)	White

Item Code	Item Name	Door Weight	Weight	Box
170-029-834	3535WSS	Max. 25 kg/2 pcs	206 g	2 pcs
170-029-835	4040WSS	Max. 30 kg/2 pcs	264 g	2 pcs

BUTT HINGE (W/ BALL BEARING)

L=R STAINLESS 304 STEEL STEEL

4545BSS

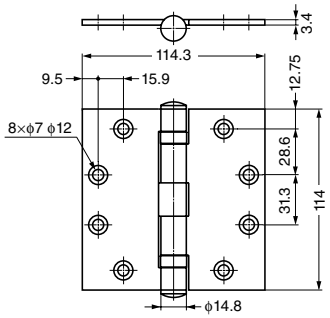

Features

Ball bearing provides smooth movement.

Parts Included

Countersunk head tapping screw 5.5×32

Item Code	Item Name	Material	Finish	Door Weight	Weight	Box	Carton
170-920-184	4545BSS	Stainless Steel (SUS304)	Satin	Max. 45 kg/2 pcs	475 g	2 pcs	50 pcs

BUTT HINGE

L=R STEEL **3535**

Discontinued

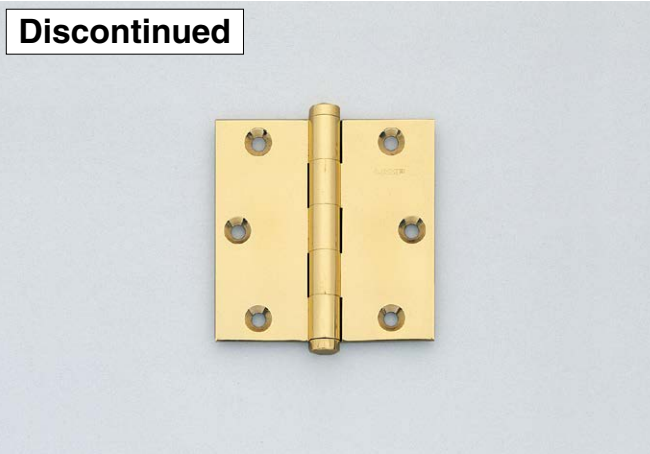

Parts Included

Countersunk head wood screw

Sold Separately

Head cap MG-M

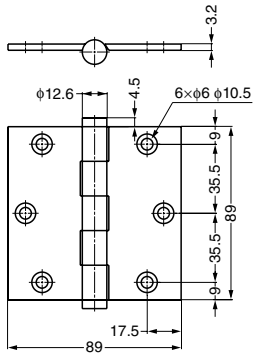

Head Cap MG-M

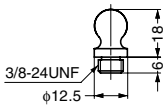

Head Cap (Sold Separately)

Item Code	Item Name	Finish
170-094-058	MG-M	Metal Polish, Clear

Item Code	Item Name	Material	Finish	Door Width	Door Height	Door Weight	Screw	Weight	Box	Carton
170-090-092	3535	Brass	Polished	Max. 800	Max. 2000	Max. 20 kg/2 pcs	5×26	265 g	2 pcs	60 pcs

BUTT HINGE (W/ BALL BEARING)

L=R STEEL **4040B**

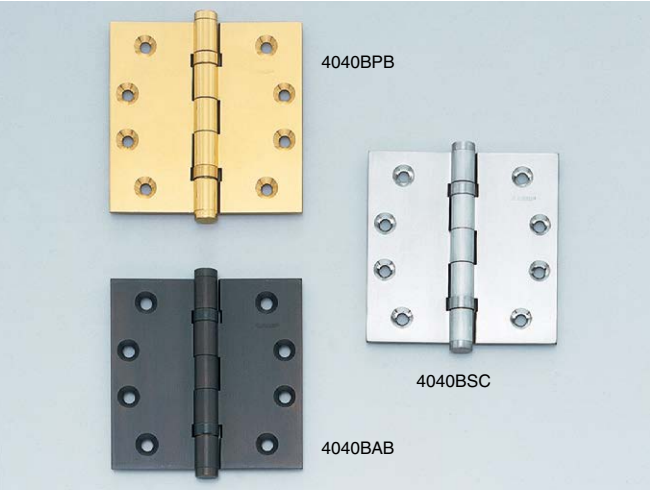

Features

- Ball bearing provides smooth movement.
- The material of axis is stainless steel (SUS304).
- 3 types of finish available.
- Optional accessary for hinge axis MG-M available.

Parts Included

Countersunk head wood screw 5.5×33

Sold Separately

Head Cap MG-M

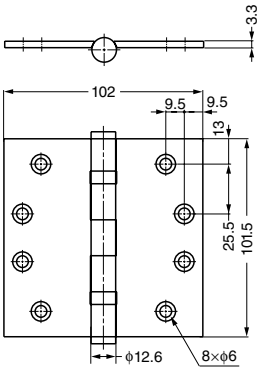

Head Cap MG-M

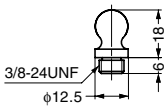

Head Cap (Sold Separately)

Item Code	Item Name	Finish
170-094-058	MG-M	Metal Polish, Clear

Item Code	Item Name	Finish	Material	Door Width	Door Height	Door Weight	Weight	Box	Carton
170-918-790	4040BPB	Polished Brass	Brass	Max. 900	Max. 2000	Max. 50 kg	360 g	2 pcs	40 pcs
170-918-791	4040BSC	Satin Chrome	Brass	Max. 900	Max. 2000	Max. 50 kg	360 g	2 pcs	40 pcs
170-918-792	4040BAB	Antique Bronze	Brass	Max. 900	Max. 2000	Max. 50 kg	360 g	2 pcs	40 pcs

SPRING HINGE

L=R STAINLESS 304 STEEL **SA**

Features

- Successfully passed 500,000 open/close cycles in a private test.
- Spring powered to automatically close.
- Spring strength is adjustable.
- All parts made from stainless steel (SUS304) for high corrosion resistance.

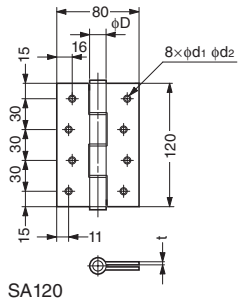

SA120

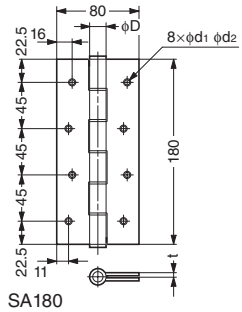

SA180

Installation

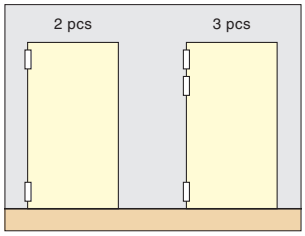

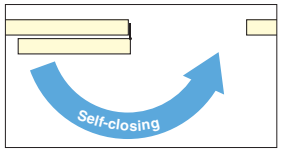

How to Adjust Spring Tension

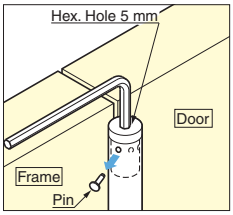

Loosen shaft with Hex key and remove the pin.

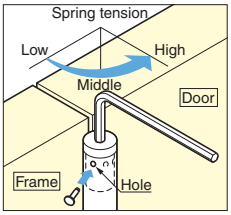

Adjust spring tension with three steps. Put the pin to the hole and fix.

Item Code	Item Name	Material	Finish	D	t	d_1	d_2	Load Capacity (Door width Max. 1000 mm)		Weight	Box
170-090-810	SA120-5314-01	Aluminium Alloy	Anodized	16	4	5.3	10	196 N (20 kgf)/2 pcs	294 N (30 kgf)/3 pcs	191 g	2 pcs
170-090-811	SA180-5814-01	Aluminium Alloy	Anodized	16	4	5.3	10	392 N (40 kgf)/2 pcs	588 N (60 kgf)/3 pcs	276 g	2 pcs
170-090-812	SA120-5314-05	Stainless Steel (SUS304)	Plain	17	2.5	5.5	9	196 N (20 kgf)/2 pcs	294 N (30 kgf)/3 pcs	276 g	2 pcs
170-090-813	SA180-5814-05	Stainless Steel (SUS304)	Plain	18	3	5.5	9	392 N (40 kgf)/2 pcs	588 N (60 kgf)/3 pcs	570 g	2 pcs

SPRING HINGE

L=R STAINLESS 304 STEEL **ST150-6314-05**

Features

- Successfully passed 500,000 open/close cycles in a private test.
- Spring powered to automatically close.
- Spring strength is adjustable.
- All parts made from stainless steel (SUS304) for high corrosion resistance.
- Easy surface installation does not require mortise.

Installation

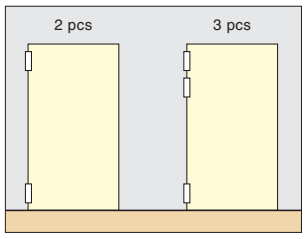

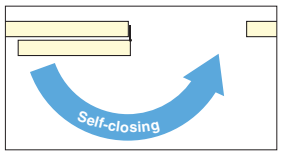

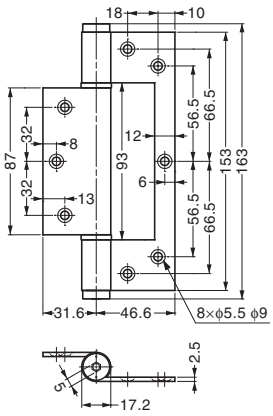

How to Adjust Spring Tension

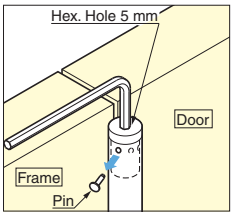

Loosen shaft with Hex key and remove the pin.

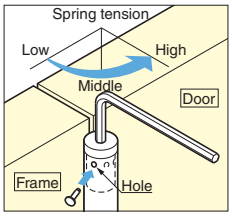

Adjust spring tension with three steps. Put the pin to the hole and fix.

Item Code	Item Name	Material	Finish	Load Capacity (Door width Max. 1000 mm)		Weight	Box
170-022-486	ST150-6314-05	Stainless Steel (SUS304)	Plain	400 N (40 kgf)/2 pcs	600 N (60 kgf)/3 pcs	736 g	2 pcs

DOUBLE ACTION HINGE

L=R STAINLESS 304 STEEL **DA**

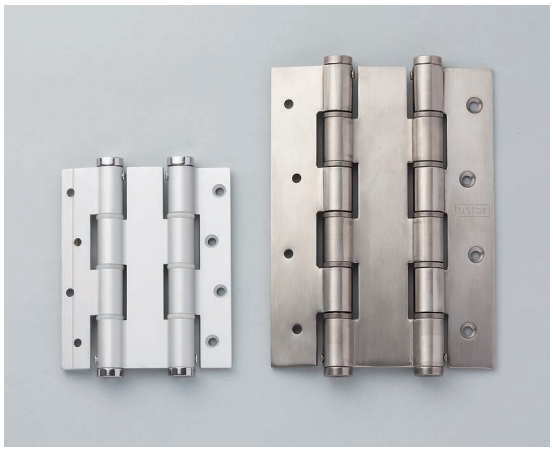

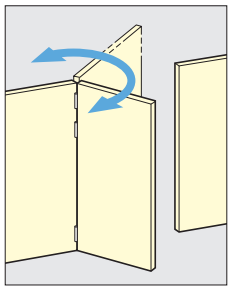

Features

- Successfully passed 500,000 open/close cycles in a private test.
- Hinge allows door to be opened forwards or backwards.
- Spring powered to automatically close.
- Spring strength is adjustable.
- Angle of opening movement in either direction is 180°.
- All parts made from stainless steel (SUS304) for high corrosion resistance.

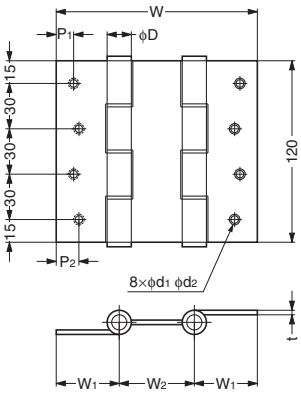

DA120

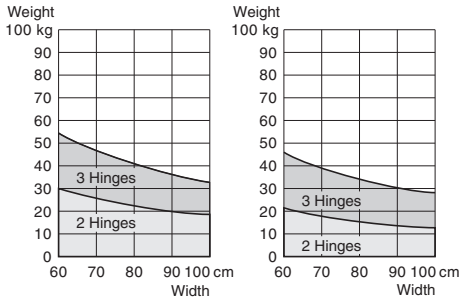

DA120-5404

DA120-5414

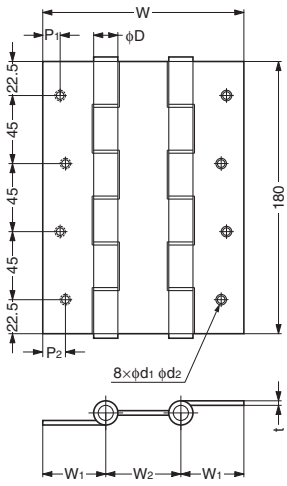

DA180

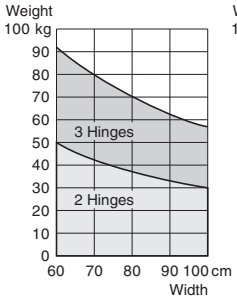

DA180-5904

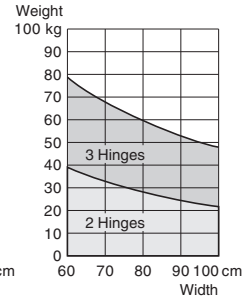

DA180-5914

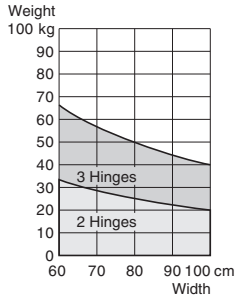

DA180-5934

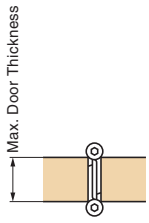

Installation

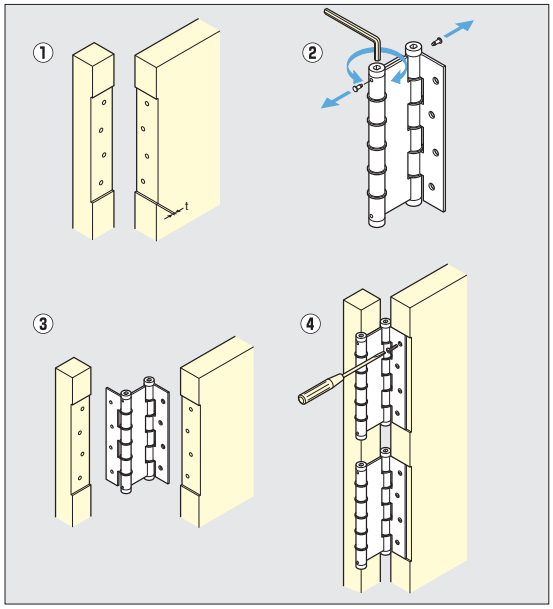

How to Adjust Spring Tension

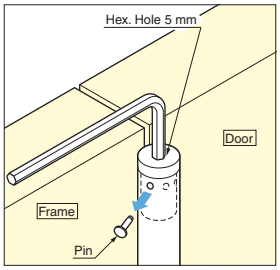

Loosen shaft with Hex key and remove the pin.

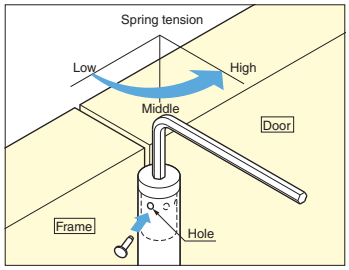

Adjust spring tension with three steps. Put the pin to the hole and fix.

Item Code	Item Name	Material	Finish	W	W_1	W_2	P_1	P_2	D	t	d_1	d_2	Max. Door Thickness	Weight	Box
170-090-803	DA120-5404-01	Aluminium Alloy	Anodized	101	29.5	42	6.5	11.5	16	4	5.3	10	30	296 g	2 pcs
170-090-804	DA120-5414-01	Aluminium Alloy	Anodized	133	40	53	11	16	16	4	5.3	10	40	337 g	2 pcs
170-090-805	DA120-5414-05	Stainless Steel (SUS304)	Plain	133	40	53	11	16	17	2.5	5.5	9	36	599 g	2 pcs
170-090-806	DA180-5904-01	Aluminium Alloy	Anodized	101	29.5	42	6.5	11.5	16	4	5.3	10	30	431 g	2 pcs
170-090-807	DA180-5914-01	Aluminium Alloy	Anodized	133	40	53	11	16	16	4	5.3	10	40	492 g	2 pcs
170-090-808	DA180-5914-05	Stainless Steel (SUS304)	Plain	133	40	53	11	16	18	3	5.5	9	38	1,006 g	2 pcs
170-090-809	DA180-5934-01	Aluminium Alloy	Anodized	157	48.5	60	19.5	24.5	16	4	5.3	10	50	560 g	2 pcs

ALUMINIUM SPRING HINGE

L=R **DAW**

Features

- Hinge allows door to be opened forwards or backwards.
- Spring powered to automatically close.
- Spring strength is adjustable.
- Angle of opening movement in either direction is 180°.
- Please use in combination with door stoppers.

Remarks

Please use with door stopper.

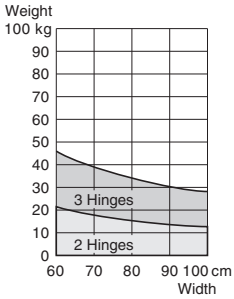

DAW120

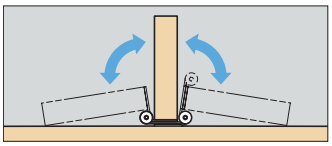

How to Adjust Spring Tension

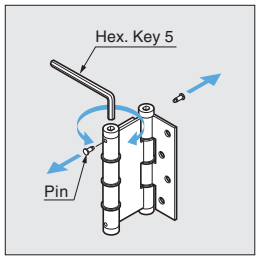

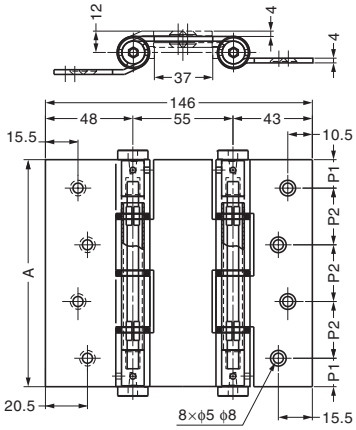

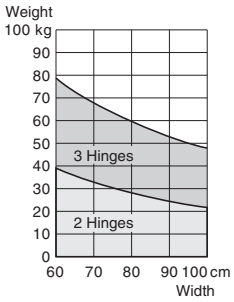

DAW180

Item Code	Item Name	Material	Finish	A	P1	P2	Door Thickness	Weight	Box
170-017-703	DAW120	Aluminium Alloy	Anodized	120	15	30	Max. 35	342 g	2 pcs
170-017-702	DAW180	Aluminium Alloy	Anodized	180	22.5	45	Max. 35	506 g	2 pcs

※The dimension "8×ϕ5 ϕ8" will change to "8×ϕ5.3 ϕ10" when the current stock runs out.

ALUMINIUM SPRING LIFT-OFF HINGE

PM120

Features

- Successfully passed 250,000 open/close cycles in a private test.
- Spring powered to automatically close.
- Spring strength is adjustable.
- Easy to remove door from frame post-installation.

Installation

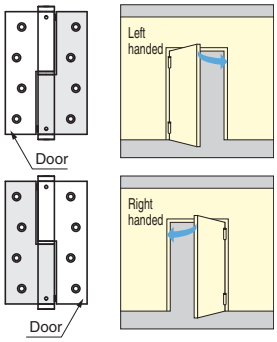

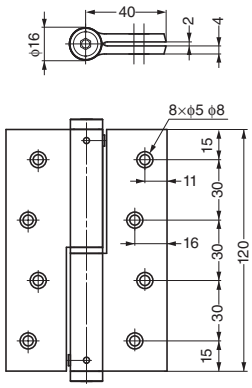

PM120-524401L

How to Adjust Spring Tension

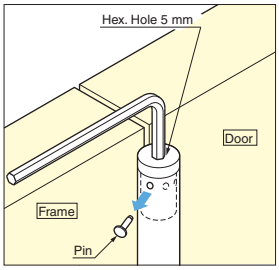

Loosen shaft with Hex key and remove the pin.

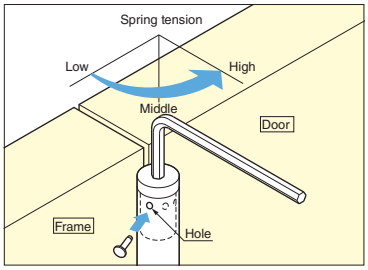

Adjust spring tension with three steps. Put the pin to the hole and fix.

Item Code	Item Name	Material	Finish	Load Capacity (Door Width Max. 1000 mm)		Weight	Box
170-022-484	PM120-524401L	Aluminium Alloy	Anodized	200 N (20 kgf)/2 pcs	300 N (30 kgf)/3 pcs	380 g	2 pcs
170-022-485	PM120-525401R	Aluminium Alloy	Anodized	200 N (20 kgf)/2 pcs	300 N (30 kgf)/3 pcs	380 g	2 pcs

※The dimension "8×ϕ5 ϕ8" will change to "8×ϕ5.3 ϕ10" when the current stock runs out.